Notes:
1. All dimensions to be controlled on site.
2. Shop drawings and sample to be approved by Architect prior to any manufacturing

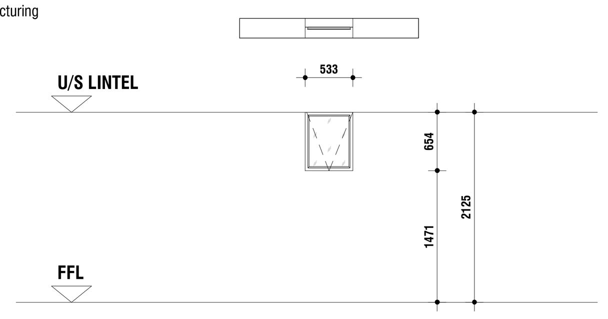

WINDOW TYPE	W1	WALL TYPE - BRICKWALL	QUANTITY	1
LOCATION	ADMIN			
FRAME	Top hung standard steel window, finished in Grey oxide primer (Code: NE1), size 533mm x 654mm high, fitted with B1 burglar bars. Window to comply strictly to SABS as well as the AAAMSA standards concerning sections, size and opening section. Joints between window frame and wall opening to be sealed water tight with an approved sealant			
FRAME FINISH	1 Coat approved steel primer - factory coated and 2 coats enamel. Color to finishes specifications. Waterproof frame surround and joints with an approved soft seal.			
GLAZING	Windows to be glazed to SANS min. standards - 6.4mm Low-E glass in panes smaller than and 6mm saftey glass for all panels lower than 900mm above FFL (Fit obscure glazing in toilets and ablutions). All to comply with National building regulations see also glazing preambles for minimum standards.			
CILL	Externally - brick cill (facebrick) Internally - Plastered & painted			
REMARKS	Hinges & window catches included.			
FURNITURE /GENERAL	WINDOW TO HAVE MECHANISM WHICH ALLOWS MAXIMUM OF 200mm OPENING WHEN WINDOW IS OPENED			

Notes:
1. All dimensions to be controlled on site.
2. Shop drawings and sample to be approved by Architect prior to any manufacturing

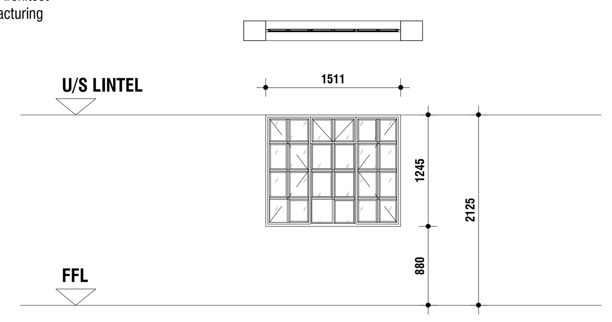

WINDOW TYPE	W8	WALL TYPE - BRICKWALL	QUANTITY	6
LOCATION	ADMIN;			
FRAME	Top hung standard steel window, finished in Grey oxide primer (Code: D4F), size 1 511mm x 1 245mm high, fitted with B1 burglar bars. Window to comply strictly to SABS as well as the AAAMSA standards concerning sections, size and opening section. Joints between window frame and wall opening to be sealed water tight with an approved sealant			
FRAME FINISH	1 Coat approved steel primer - factory coated and 2 coats enamel. Color to finishes specifications. Waterproof frame surround and joints with an approved soft seal.			
GLAZING	Windows to be glazed to SANS min. standards - 6.4mm Low-E glass in panes smaller than and 6mm saftey glass for all panels lower than 900mm above FFL (Fit obscure glazing in toilets and ablutions). All to comply with National building regulations see also glazing preambles for minimum standards.			
CILL	Externally - brick cill (facebrick) Internally - Plastered & painted			
REMARKS	Hinges & window catches included.			
FURNITURE /GENERAL	WINDOW TO HAVE MECHANISM WHICH ALLOWS MAXIMUM OF 200mm OPENING WHEN WINDOW IS OPENED			

Notes:
1. All dimensions to be controlled on site.
2. Shop drawings and sample to be approved by Architect prior to any manufacturing

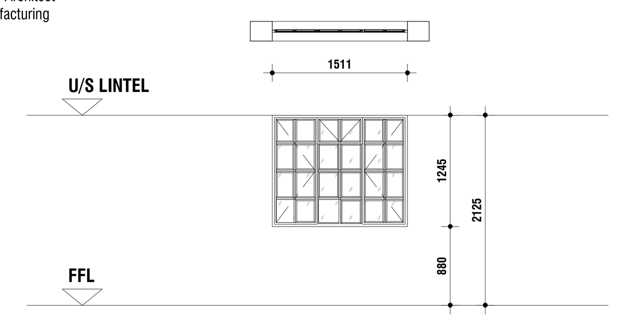

WINDOW TYPE	W10	WALL TYPE - BRICKWALL	QUANTITY	12
LOCATION	GRADE R			
FRAME	Top & side hung standard steel window, finished in Grey oxide primer (Code: D4F), size 1 511mm x 1 245mm high, fitted with B1 burglar bars. Window to comply strictly to SABS as well as the AAAMSA standards concerning sections, size and opening section. Joints between window frame and wall opening to be sealed water tight with an approved sealant			
FRAME FINISH	1 Coat approved steel primer - factory coated and 2 coats enamel. Color to finishes specifications. Waterproof frame surround and joints with an approved soft seal.			
GLAZING	Windows to be glazed to SANS min. standards - 6.4mm Low-E glass in panes smaller than and 6mm saftey glass for all panels lower than 900mm above FFL (Fit obscure glazing in toilets and ablutions). All to comply with National building regulations see also glazing preambles for minimum standards.			
CILL	Externally - brick cill (facebrick) Internally - Plastered & painted			
REMARKS	Hinges & window catches included.			
FURNITURE /GENERAL	WINDOW TO HAVE MECHANISM WHICH ALLOWS MAXIMUM OF 200mm OPENING **FOR TOP SECTION ONLY** WHEN WINDOW IS OPENED			

Notes:
1. All dimensions to be controlled on site.
2. Shop drawings and sample to be approved by Architect prior to any manufacturing

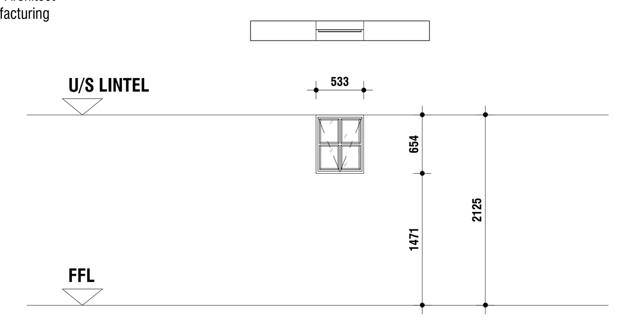

WINDOW TYPE	W11	WALL TYPE - BRICKWALL	QUANTITY	4
LOCATION	NUTRITION			
FRAME	Top hung standard steel window, finished in Grey oxide primer (Code: E1), size 533mm x 654mm high, fitted with B1 burglar bars. Window to comply strictly to SABS as well as the AAAMSA standards concerning sections, size and opening section. Joints between window frame and wall opening to be sealed water tight with an approved sealant			
FRAME FINISH	1 Coat approved steel primer - factory coated and 2 coats enamel. Color to finishes specifications. Waterproof frame surround and joints with an approved soft seal.			
GLAZING	Windows to be glazed to SANS min. standards - 6.4mm Low-E glass in panes smaller than and 6mm saftey glass for all panels lower than 900mm above FFL (Fit obscure glazing in toilets and ablutions). All to comply with National building regulations see also glazing preambles for minimum standards.			
CILL	Externally - brick cill (facebrick) Internally - Plastered & painted			
REMARKS	Hinges & window catches included.			
FURNITURE /GENERAL	WINDOW TO HAVE MECHANISM WHICH ALLOWS MAXIMUM OF 200mm OPENING WHEN WINDOW IS OPENED			

Notes:
1. All dimensions to be controlled on site.
2. Shop drawings and sample to be approved by Architect prior to any manufacturing

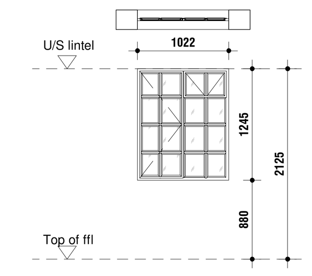

WINDOW TYPE	W12	WALL TYPE - BRICKWALL	QUANTITY	10
LOCATION	NUTRITION			
FRAME	Top hung standard steel window, finished in Grey oxide primer (Code: D2F), size 1022mm x 1245mm high, fitted with B1 burglar bars. Window to comply strictly to SABS as well as the AAAMSA standards concerning sections, size and opening section. Joints between window frame and wall opening to be sealed water tight with an approved sealant			
FRAME FINISH	1 Coat approved steel primer - factory coated and 2 coats enamel. Color to finishes specifications. Waterproof frame surround and joints with an approved soft seal.			
GLAZING	Windows to be glazed to SANS min. standards - 6.4mm Low-E glass in panes smaller than and 6mm saftey glass for all panels lower than 900mm above FFL (Fit obscure glazing in toilets and ablutions). All to comply with National building regulations see also glazing preambles for minimum standards.			
CILL	Externally - brick cill (facebrick) Internally - Plastered & painted			
REMARKS	Hinges & window catches included.			
FURNITURE /GENERAL	WINDOW TO HAVE MECHANISM WHICH ALLOWS MAXIMUM OF 200mm OPENING WHEN WINDOW IS OPENED			

Notes:
1. All dimensions to be controlled on site.
2. Shop drawings and sample to be approved by Architect prior to any manufacturing

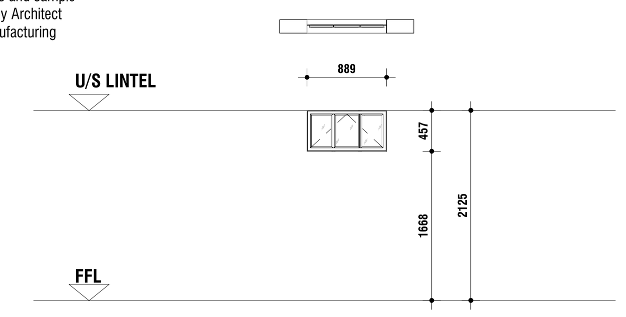

WINDOW TYPE	W13	WALL TYPE - BRICKWALL	QUANTITY	6
LOCATION	NUTRITION; LIBRARY			
FRAME	Top hung standard steel window, finished in Grey oxide primer (Code: 4-BH), size 889mm x 427mm high, fitted with B1 burglar bars. Window to comply strictly to SABS as well as the AAAMSA standards concerning sections, size and opening section. Joints between window frame and wall opening to be sealed water tight with an approved sealant			
FRAME FINISH	1 Coat approved steel primer - factory coated and 2 coats enamel. Color to finishes specifications. Waterproof frame surround and joints with an approved soft seal.			
GLAZING	Windows to be glazed to SANS min. standards - 6.4mm Low-E glass in panes smaller than and 6mm saftey glass for all panels lower than 900mm above FFL (Fit obscure glazing in toilets and ablutions). All to comply with National building regulations see also glazing preambles for minimum standards.			
CILL	Externally - brick cill (facebrick) Internally - Plastered & painted			
REMARKS	Hinges & window catches included.			
FURNITURE /GENERAL	WINDOW TO HAVE MECHANISM WHICH ALLOWS MAXIMUM OF 200mm OPENING WHEN WINDOW IS OPENED			

Notes:
1. All dimensions to be controlled on site.
2. Shop drawings and sample to be approved by Architect prior to any manufacturing

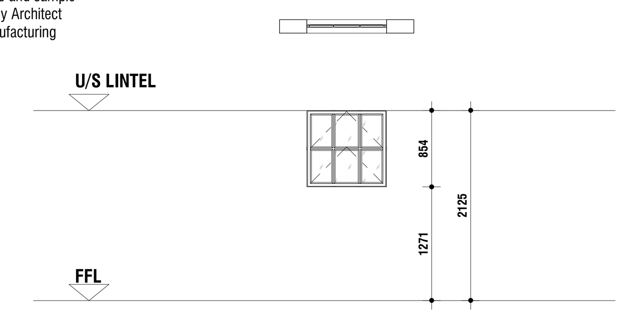

WINDOW TYPE	W14	WALL TYPE - BRICKWALL	QUANTITY	31
LOCATION	NUTRITION; GRADE R; HOD; MATHS & SCIENCE LAB			
FRAME	Top hung standard steel window, finished in Grey oxide primer (Code: 14-BH), size 889mm x 854mm high, fitted with B1 burglar bars. Window to comply strictly to SABS as well as the AAAMSA standards concerning sections, size and opening section. Joints between window frame and wall opening to be sealed water tight with an approved sealant			
FRAME FINISH	1 Coat approved steel primer - factory coated and 2 coats enamel. Color to finishes specifications. Waterproof frame surround and joints with an approved soft seal.			
GLAZING	Windows to be glazed to SANS min. standards - 6.4mm Low-E glass in panes smaller than and 6mm saftey glass for all panels lower than 900mm above FFL (Fit obscure glazing in toilets and ablutions). All to comply with National building regulations see also glazing preambles for minimum standards.			
CILL	Externally - brick cill (facebrick) Internally - Plastered & painted			
REMARKS	Hinges & window catches included.			
FURNITURE /GENERAL	WINDOW TO HAVE MECHANISM WHICH ALLOWS MAXIMUM OF 200mm OPENING WHEN WINDOW IS OPENED			

Notes:
1. All dimensions to be controlled on site.
2. Shop drawings and sample to be approved by Architect prior to any manufacturing

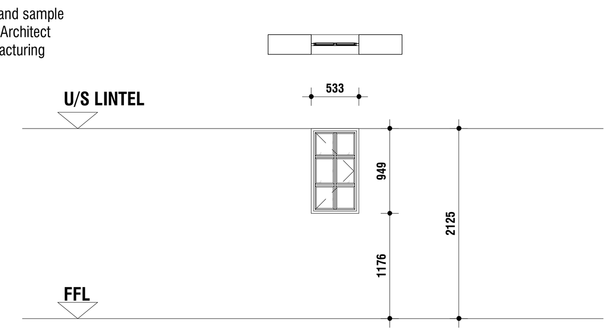

WINDOW TYPE	W20	WALL TYPE - BRICKWALL	QUANTITY	4
LOCATION	GRADE R			
FRAME	Top hung standard steel window, finished in Grey oxide primer (Code: C1), size 533mm x 949mm high, fitted with B1 burglar bars. Window to comply strictly to SABS as well as the AAAMSA standards concerning sections, size and opening section. Joints between window frame and wall opening to be sealed water tight with an approved sealant			
FRAME FINISH	1 Coat approved steel primer - factory coated and 2 coats enamel. Color to finishes specifications. Waterproof frame surround and joints with an approved soft seal.			
GLAZING	Windows to be glazed to SANS min. standards - 6.4mm Low-E glass in panes smaller than and 6mm saftey glass for all panels lower than 900mm above FFL (Fit obscure glazing in toilets and ablutions). All to comply with National building regulations see also glazing preambles for minimum standards.			
CILL	Externally - brick cill (facebrick) Internally - Plastered & painted			
REMARKS	Hinges & window catches included.			
FURNITURE /GENERAL				

Notes:
1. All dimensions to be controlled on site.
2. Shop drawings and sample to be approved by Architect prior to any manufacturing

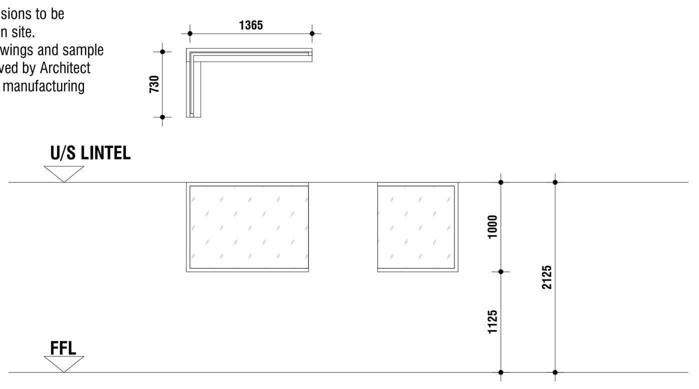

WINDOW TYPE	W21	WALL TYPE - BRICKWALL	QUANTITY	2
LOCATION	Grade R			
FRAME	Custome-made aluminum vertical pivot window with dimensions and configuration as indicated. Window to comply strictly to SABS as well as the AAAMSA standards concerning sections, size and opening section. Joints between window frame and wall opening to be sealed water tight with an approved sealant			
FRAME FINISH	Standard aluminium frame in configuration as shown with or without opening sections as shown, complete with heavy-duty hinges, latches and restrictors (max. 100mm). Waterproof frame surround and joints with an approved soft seal. Polyester powder coated. All to AAAMSA standards and Architects approval.			
GLAZING	Windows to be glazed to SANS min. standards - 6.4mm single glass in panes smaller than and 6mm saftey glass for all panels lower than 900mm above FFL (Fit obscure glazing in toilets and ablutions). All to comply with National building regulations see also glazing preambles for minimum standards.			
CILL	Internally - Plastered & painted			
REMARKS	Hinges & window catches included.			
FURNITURE /GENERAL	WINDOW TO HAVE MECHANISM WHICH ALLOWS MAXIMUM OF 200mm OPENING WHEN WINDOW IS OPENED			

N

GENERAL NOTES

THIS DRAWING IS TO BE READ IN CONJUNCTION WITH ALL RELEVANT ARCHITECT'S AND ENGINEER'S DRAWING.

ALL DIMENSIONS, LEVELS, ETC ARE TO BE CHECKED BEFORE ANY WORK IS COMMENCED AND ANY DICREPANCIES NOTED TO BE BROUGHT TO THE ARCHITECT'S ATTENTION.

ONLY FIGURED DIMENSIONS TO BE USED, SCALING OF DRAWINGS IS NOT ADVISABLE.

ALL RIGHTS RESERVED. NO PART OF THIS DESIGN SHALL BE REPRODUCED, USED ELSEWHERE AND/ OR IN ANY WAY WITHOUT PRIOR PERMISSION FROM THE ARCHITECT/ ENGINEER.

GEOTECH INFORMATION

SOIL TYPE: H2/R and Unified Soil Class (SC-CL)
ASSUMED SOIL BEARING CAPACITY: ~150 kPa kPa
RECOMMENDED FOUNDATION TYPE: Stiffened Soil Raft
RECOMMENDED FOUNDATION DEPTH: 0.8-1m

REV. NO.	DATE	DESCRIPTION
A	2021-02-21	FIRST ISSUE
B	2021-03-31	ISSUED FOR TENDER
C	2021-04-19	ISSUED FOR TENDER

MUNICIPAL APPROVAL

NAME:..
SIGNATURE:.......................................DATE:.........................

STAMPS:

PRINCIPAL AGENT
Mamadi & Company
No. 1 Newtown Avenue,
Killarney,
Johannesburg , 2193
Tel: 011 - 532 8659
Email:info@mamadi.co.za
COMPETENT CONTACT PERSON: FULL NAME
CONT. No: +2711 532 8659
FIRM REG No: 2016/012437/07

Copyright vests in the Department of Education

education
Lefapha la Thuto la Bokone Bophirima
Noord-Wes Departement van Onderwys
North West Department of Education
NORTH WEST PROVINCE

DBSA

ARCHITECT:...
SIGNATURE:.......................................DATE:.........................

OHS:..
SIGNATURE:.......................................DATE:.........................

NORTH WEST DEPARTMENT OF EDUCATION

NAME:..
SIGNATURE:.......................................DATE:.........................

NAME:..
SIGNATURE:.......................................DATE:.........................

NAME:..
SIGNATURE:.......................................DATE:.........................

DISCIPLINE
ARCHITECTURAL

PROJECT NAME
D.P. KGOTLENG PRIMARY SCHOOL
EMIS NUMBER: 600103259

PROJECT STATUS

STAGE 1-3	STAGE 4	STAGE 5-6
CONCEPT ☐	TENDER ■	CONSTRUCTION ☐

DESCRIPTION: WINDOW SCHEDULES (1)
SCALE: 1:50

DRAWN:	CHECKED:
NAME OF COMPETENT PERSON: ANDRE NKUNA	NAME OF COMPETENT PERSON: DANNY KALOMBO
REG No:	REG No: PR.ARCH24740538
SIGNATURE	SIGNATURE

PROJECT NUMBER: RFP 261/2019
DATE: 2021-02-17
DWG No: 402
REV No: C

OCCUPANCY CLASSIFICATION
A4.4 Primary & Secondary School

SANS 10400 & XA COMPLIANCE

	Rational Des.		Standard Cal	
CONDUTANCE	Y	N	Y	N
SOLAR HEAT GAIN	Y	N	Y	N
GEOGRAPHICAL ZONE				

NBRs COMPLIANCE

	Yes	No
SITE PLAN	☐	☐
OTHER DRAWINGS	☐	☐

OTHER APPROVALS

	Yes	No	N/A
Enviromental Impact Assesment (EIA)	☐	☐	☒
South African Heritage Resources Agency (SAHRA)	☐	☐	☒
Department of Water and Sanitation (DWS)	☒	☐	☐
South African National Roads Agency (SANRAL)	☐	☐	☒
Other	☐	☐	☐

WATER SUPPLIER

	Yes	No	
MUNICIPALITY	☒	☐	MUNICIPALITY NAME: Mafikeng
BOREHOLE	☒	☐	WATER USE LISENCE: Not Available
PRESSURE	TBC		BARS
TANKS	Number: 1		Total Capacity: 2000 LITERS
OTHER STORE	☐	☐	Specify below

SANITATION/ SEWER

	Yes	No	
MUNICIPALITY	☒	☐	MUNICIPALITY NAME: Mafikeng
SEPTIC TANKS	☐	☒	CAPACITY: M3
PIT LATRINES	☐	☒	
OTHER	☐	☐	SPECIFY:

SITE INFORMATION

ERF No.	747
COVERAGE	9.6 % (3442 m²)
VILLAGE NAME	Mmabatho Unit 2
DISTRICT	Ngaka Modiri Molema
COORDINATES	25°50'15.5"S 25°35'29.7"E

STAGES

SIPDM	SACAP	Mark with X
0		☐
1		☐
2		☐
3	1	☐
4	2	☒
5	3	☐
6	4	☐
7	5	☐
8		☐
9	6	☐

PROJECT TEAM

	COMPETENT CONTACT PERSON	CONTACT No.	REGISTRATION No.	COMPANY NAME
ARCHITECT	DANNY KALOMBO	+27 79 875 8873	PR.Arch 24740538	MAMADI & COMPANY
Q. SURVEYOR	HENK DOKTER	+27 82 807 9005	570 - SCQS	MAMADI & COMPANY
STRUCT. ENG	THABISO MOTSHEGOA	+27 73 757 8094	201370184 - ECSA	MAMADI & COMPANY
CIVIL ENG	GIVEN MBHOKOTA	+27 83 580 1709	201470013 - ECSA	MAMADI & COMPANY
MECH. ENG	PULE SHEANE	+27 72 172 8396	201570022 - ECSA	MAMADI & COMPANY
ELECT. ENG	JOHN MOKOENA	+27 63 005 5891	20030038 - ECSA	MAMADI & COMPANY
OHS	NATHANIEL MATHAGA	+27 72 947 7939	CHS 1400005	MAMADI & COMPANY
CONTRACTOR				

GSPublisherVersion 0.0.100.100