Notes:
1. All dimensions to be controlled on site.
2. Shop drawings and sample to be approved by Architect prior to any manufacturing

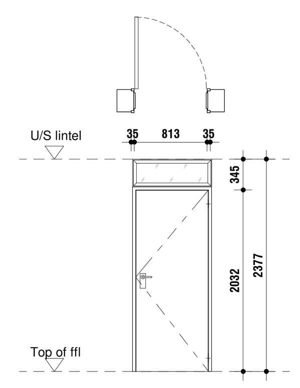

DOOR TYPE	D1	WALL TYPE - BRICKWALL	QUANTITY	2
LOCATION	HOD			
DOOR	813 X 2032 X 40 SOLID CORE FLUSH MASONITE PANEL DOOR			
FRAME	230 STEEL FRAME - STANDARD PRESSED STEEL (1.2mm THICK) DOUBLE REBATE DOOR FRAME WITH 1 PAIR OF HINGES TO SUIT 813 X 2032 X 40mm DOOR			
DOOR FINISH	PAINTED WITH 2 COATS ENAMEL PAINT COLOUR TO FINISHES SPEC			
FRAME FINISH	1 COAT APPROVED STEEL PRIMER - FACTORY COATED AND 2 COATS ENAMEL COLOUR TO FINISHES SPECIFICATION			
IRONMONGERY	- Dormakaba Stainless Steel floor mounted door stop (Code: DDS-SS-017), size 24 x 45mm - 4 lever lockset with Satin Chrome handle finish (Code: CZ682-24-61) including powder coated 4 lever lock with Zinc backplate.			
GENERAL	x2 LEFT HAND DOOR; 6.4mm CLEAR FIXED GLAZING ON FANLIGHT			

Notes:
1. All dimensions to be controlled on site.
2. Shop drawings and sample to be approved by Architect prior to any manufacturing

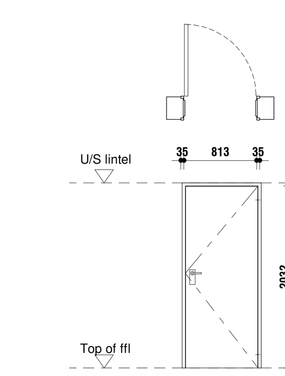

DOOR TYPE	D3	WALL TYPE - BRICKWALL	QUANTITY	14
LOCATION	NUTRITION; GRADE R; ADMIN; HOD			
DOOR	813 X 2032 X 40 SOLID CORE FLUSH MASONITE PANEL DOOR			
FRAME	230 STEEL FRAME - STANDARD PRESSED STEEL (1.2mm THICK) DOUBLE REBATE DOOR FRAME WITH 1 PAIR OF HINGES TO SUIT 813 X 2032 X 40mm DOOR			
DOOR FINISH	PAINTED WITH 2 COATS ENAMEL PAINT COLOUR TO FINISHES SPEC			
FRAME FINISH	1 COAT APPROVED STEEL PRIMER - FACTORY COATED AND 2 COATS ENAMEL COLOUR TO FINISHES SPECIFICATION			
IRONMONGERY	- Dormakaba Stainless Steel floor mounted door stop (Code: DDS-SS-017), size 24 x 45mm - 4 lever lockset with Satin Chrome handle finish (Code: CZ682-24-61) including powder coated 4 lever lock with Zinc backplate.			
GENERAL	x4 LEFT HAND DOOR; x4 RIGHT HAND DOORS;			

Notes:
1. All dimensions to be controlled on site.
2. Shop drawings and sample to be approved by Architect prior to any manufacturing

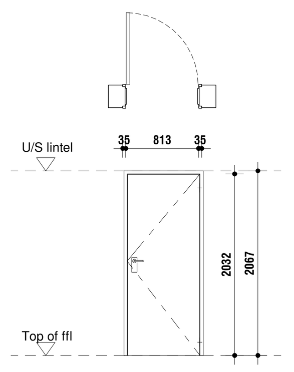

DOOR TYPE	D4	WALL TYPE - BRICKWALL	QUANTITY	16
LOCATION	NUTRITION; GRADE R; ADMIN; SCIENCE LAB			
DOOR	813 X 2032 X 40 SOLID CORE FLUSH MASONITE PANEL DOOR			
FRAME	115 STEEL FRAME - STANDARD PRESSED STEEL (1.2mm THICK) DOUBLE REBATE DOOR FRAME WITH 1 PAIR OF HINGES TO SUIT 813 X 2032 X 40mm DOOR			
DOOR FINISH	PAINTED WITH 2 COATS ENAMEL PAINT COLOUR TO FINISHES SPEC			
FRAME FINISH	1 COAT APPROVED STEEL PRIMER - FACTORY COATED AND 2 COATS ENAMEL COLOUR TO FINISHES SPECIFICATION			
IRONMONGERY	- Dormakaba Stainless Steel floor mounted door stop (Code: DDS-SS-017), size 24 x 45mm - 4 lever lockset with Satin Chrome handle finish (Code: CZ682-24-61) including powder coated 4 lever lock with Zinc backplate.			
GENERAL	x8 LEFT HAND DOOR; x8 RIGHT HAND DOORS;			

Notes:
1. All dimensions to be controlled on site.
2. Shop drawings and sample to be approved by Architect prior to any manufacturing

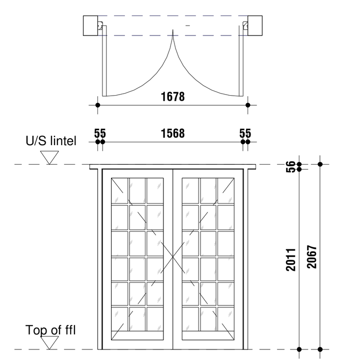

DOOR TYPE	D6	WALL TYPE - BRICKWALL	QUANTITY	3
LOCATION	NUTRITION; LIBRARY			
DOOR	Double leaf small pane steel french doors (Code: DDA), overall size 1511 x 2134mm high			
FRAME	230 STEEL FRAME - STANDARD PRESSED STEEL (1.2mm THICK) DOUBLE REBATE DOOR FRAME WITH 1 PAIR OF HINGES EACH SIDE TO SUIT 756 X 2032			
DOOR FINISH	PAINTED WITH 2 COATS ENAMEL PAINT COLOUR TO FINISHES SPEC			
FRAME FINISH	1 COAT APPROVED STEEL PRIMER - FACTORY COATED AND 2 COATS ENAMEL COLOUR TO FINISHES SPECIFICATION			
IRONMONGERY	- x2 Dormakaba Stainless Steel floor mounted door stop (Code: DDS-SS-017), size 24 x 45mm - 4 lever lockset with Satin Chrome handle finish (Code: CZ682-24-61) including powder coated 4 lever lock with Zinc backplate.			
GENERAL	Glazing shall be executed strictly in conformance with glass engineer's recommendations and SANS 10137:2011 all in accordance with SANS 10400 Parts B, N, XA, fixed in accordance with the engineer's recommendations.			

Notes:
1. All dimensions to be controlled on site.
2. Shop drawings and sample to be approved by Architect prior to any manufacturing

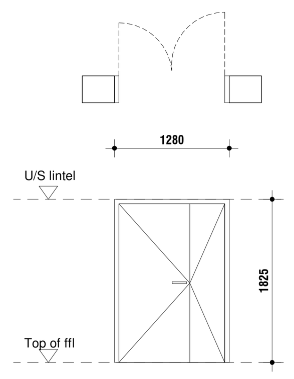

DOOR TYPE	D7	WALL TYPE - BRICKWALL	QUANTITY	1
LOCATION	NUTRITION			
DOOR	1280x1825mm Galvanised steel double room dooR.			
FRAME	Standard 1.2mm galvanised steel pressed metal double rebated door frame complete with fixing lugs and 2 steel butt hinges, suitable for 270mm facebrick walls			
DOOR FINISH	Wash door with galvanised iron cleaner, rinse & allow to dry. paint with undercoat suitable for galvanised iron surfaces, followed by 2 coats of non-drip enamel paint. colour to architect's approval.			
FRAME FINISH	wash door frame with galvanised iron cleaner, rinse & allow to dry. paint with undercoat suitable for galvanised iron surfaces, followed by 2 coats of non-drip enamel paint. colour to architect's approval.			
IRONMONGERY	- x4 UNION two ball bearing butt hinge (code: 8352-100SS) with Stainless Steel finish.- 4 lever lockset with Satin Chrome handle finish (Code: CZ682-24-61) including powder coated 4 lever lock with Zinc backplate.			
GENERAL				

Notes:
1. All dimensions to be controlled on site.
2. Shop drawings and sample to be approved by Architect prior to any manufacturing

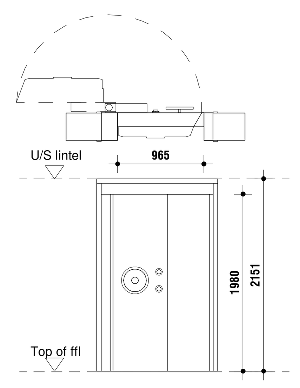

DOOR TYPE	D9	WALL TYPE - BRICKWALL	QUANTITY	1
LOCATION	ADMIN			
DOOR	Chubb or similar SANS 949:2005 approved left hand opening category 2 heavy duty strong room door and frame constructed of 20mm steel plate. All to fit wall opening of 1930 x 850mm wide. Mass 450kg.			
FRAME				
DOOR FINISH	Finished with Grey zinc chromate rust resistant primer			
FRAME FINISH	Finished with Grey zinc chromate rust resistant primer			
IRONMONGERY	Fitted with one-way moving boltwork with 3 x 250mm round bolts with rebate on hinged side with 2 x 7-lever keylocks, 1 x combination lock, inner release mechanism and floor mounted door stop,			
GENERAL				

Notes:
1. All dimensions to be controlled on site.
2. Shop drawings and sample to be approved by Architect prior to any manufacturing

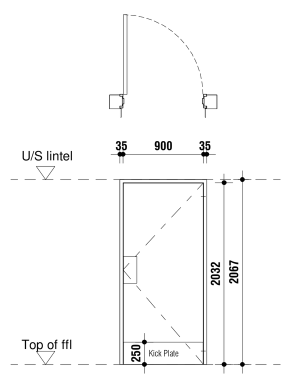

DOOR TYPE	D10	WALL TYPE - BRICKWALL	QUANTITY	2
LOCATION	GRADE R			
DOOR	900 X 2032 X 40 SOLID CORE FLUSH MASONITE PANEL DOOR			
FRAME	115 STEEL FRAME - STANDARD PRESSED STEEL (1.2mm THICK) DOUBLE REBATE DOOR FRAME WITH 1 PAIR OF HINGES TO SUIT 900 X 2032 X 40mm DOOR			
DOOR FINISH	PAINTED WITH 2 COATS ENAMEL PAINT COLOUR TO FINISHES SPEC			
FRAME FINISH	1 COAT APPROVED STEEL PRIMER - FACTORY COATED AND 2 COATS ENAMEL COLOUR TO FINISHES SPECIFICATION			
IRONMONGERY	- UNION stainless steel indicator bolts (code: SS8023SS) with Stainless Steel finish. - Stainless Steel 152 x 76mm push plate, size 152 x 76mm (Code: SS5063-06SS). - Dormakaba Stainless Steel floor mounted door stop (Code: DDS-SS-017), size 24 x 45mm			
GENERAL	x1 LEFT HAND DOOR; x1 RIGHT HAND DOORS;			

Notes:
1. All dimensions to be controlled on site.
2. Shop drawings and sample to be approved by Architect prior to any manufacturing

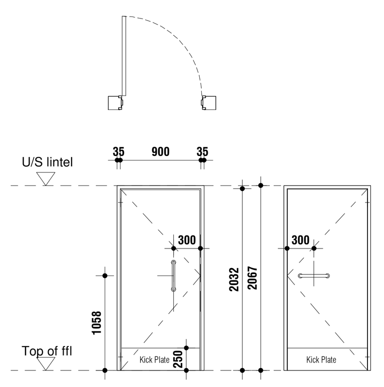

DOOR TYPE	D11	WALL TYPE - BRICKWALL	QUANTITY	2
LOCATION	GRADE R			
DOOR	900 X 2032 X 40 SOLID CORE FLUSH MASONITE PANEL DOOR			
FRAME	115 STEEL FRAME - STANDARD PRESSED STEEL (1.2mm THICK) DOUBLE REBATE DOOR FRAME WITH 1 PAIR OF HINGES TO SUIT 900 X 2032 X 40mm DOOR			
DOOR FINISH	PAINTED WITH 2 COATS ENAMEL PAINT COLOUR TO FINISHES SPEC			
FRAME FINISH	1 COAT APPROVED STEEL PRIMER - FACTORY COATED AND 2 COATS ENAMEL COLOUR TO FINISHES SPECIFICATION			
IRONMONGERY	- UNION stainless steel indicator bolts (code: SS8023SS) with Stainless Steel finish. - x2 Dormakaba Tubular straight Stainless Steel back-to-back pull handle (Code: DPH301BBTB), size 25mm diameter x 325mm long. - Dormakaba Stainless Steel floor mounted door stop (Code: DDS-SS-017), size 24 x 45mm			
GENERAL	x1 LEFT HAND DOOR; x1 RIGHT HAND DOORS;			

Notes:
1. All dimensions to be controlled on site.
2. Shop drawings and sample to be approved by Architect prior to any manufacturing

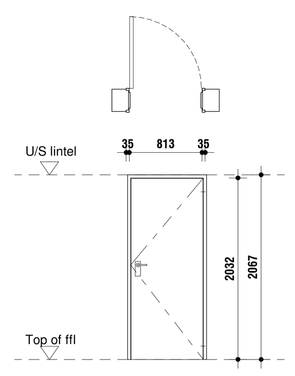

DOOR TYPE	D12	WALL TYPE - BRICKWALL	QUANTITY	1
LOCATION	SCIENCE LAB			
DOOR	813 X 2032 X 40 SOLID CORE FLUSH MASONITE PANEL DOOR			
FRAME	330 STEEL FRAME - STANDARD PRESSED STEEL (1.2mm THICK) DOUBLE REBATE DOOR FRAME WITH 1 PAIR OF HINGES TO SUIT 813 X 2032 X 40mm DOOR			
DOOR FINISH	PAINTED WITH 2 COATS ENAMEL PAINT COLOUR TO FINISHES SPEC			
FRAME FINISH	1 COAT APPROVED STEEL PRIMER - FACTORY COATED AND 2 COATS ENAMEL COLOUR TO FINISHES SPECIFICATION			
IRONMONGERY	- Dormakaba Stainless Steel floor mounted door stop (Code: DDS-SS-017), size 24 x 45mm - 4 lever lockset with Satin Chrome handle finish (Code: CZ682-24-61) including powder coated 4 lever lock with Zinc backplate.			
GENERAL	x0 LEFT HAND DOOR; x1 RIGHT HAND DOORS;			

N

DBSA

ARCHITECT:..

SIGNATURE:...DATE:..........................

OHS:...

SIGNATURE:...DATE:..........................

NORTH WEST DEPARTMENT OF EDUCATION

NAME:...

SIGNATURE:...DATE:..........................

NAME:...

SIGNATURE:...DATE:..........................

NAME:...

SIGNATURE:...DATE:..........................

GENERAL NOTES

THIS DRAWING IS TO BE READ IN CONJUNCTION WITH ALL RELEVANT ARCHITECT'S AND ENGINEER'S DRAWING.

ALL DIMENSIONS, LEVELS, ETC ARE TO BE CHECKED BEFORE ANY WORK IS COMMENCED AND ANY DICREPANCIES NOTED TO BE BROUGHT TO THE ARCHITECT'S ATTENTION.

ONLY FIGURED DIMENSIONS TO BE USED, SCALING OF DRAWINGS IS NOT ADVISABLE.

ALL RIGHTS RESERVED. NO PART OF THIS DESIGN SHALL BE REPRODUCED, USED ELSEWHERE AND/ OR IN ANY WAY WITHOUT PRIOR PERMISSION FROM THE ARCHITECT/ ENGINEER.

GEOTECH INFORMATION

SOIL TYPE: H2/R and Unified Soil Class (SC-CL)

ASSUMED SOIL BEARING CAPACITY: ~150 kPa kPa

RECOMMENDED FOUNDATION TYPE: Stiffened Soil Raft

RECOMMENDED FOUNDATION DEPTH: 0.8-1m

REV. NO.	DATE	DESCRIPTION
A	2021-02-21	FIRST ISSUE
B	2021-03-31	ISSUED FOR TENDER
C	2021-04-19	ISSUED FOR TENDER

MUNICIPAL APPROVAL

NAME:...

SIGNATURE:...DATE:..........................

STAMPS:

PRINCIPAL AGENT

Mamadi & Company

No. 1 Newtown Avenue, Killarney, Johannesburg , 2193

Tel: 011 - 532 8659
Email:info@mamadi.co.za

COMPETENT CONTACT PERSON:	CONT. No: +2711 532 8659
FULL NAME	FIRM REG No: 2016/012437/07

Copyright vests in the Department of Education

education
Lefapha la Thuto la Bokone Bophirima
Noord-Wes Departement van Onderwys
North West Department of Education
NORTH WEST PROVINCE

DISCIPLINE
ARCHITECTURAL

PROJECT NAME
D.P. KGOTLENG PRIMARY SCHOOL
EMIS NUMBER:
600103259

PROJECT STATUS

STAGE 1-3	STAGE 4	STAGE 5-6
CONCEPT	TENDER ■	CONSTRUCTION

DESCRIPTION: DOOR SCHEDULES
SCALE: 1:50

DRAWN:	CHECKED:
NAME OF COMPETENT PERSON: ANDRE NKUNA	NAME OF COMPETENT PERSON: DANNY KALOMBO
REG No:	REG No: PR.ARCH24740538
SIGNATURE	SIGNATURE

PROJECT NUMBER: RFP 261/2019
DATE: 2021-02-17
DWG No: 400
OCCUPANCY CLASSIFICATION: A4.4 Primary & Secondary School
REV No: C

SANS 10400 & XA COMPLIANCE

	Rational Des.		Standard Cal	
CONDUTANCE	Y	N	Y	N
SOLAR HEAT GAIN	Y	N	Y	N
GEOGRAPHICAL ZONE				

NBRs COMPLIANCE

	Yes	No
SITE PLAN		
OTHER DRAWINGS		

OTHER APPROVALS

	Mark with X: Yes	No	N/A
Enviromental Impact Assesment (EIA)			X
South African Heritage Resources Agency (SAHRA)			X
Department of Water and Sanitation (DWS)	X		
South African National Roads Agency (SANRAL)			X
Other			

WATER SUPPLIER

	Yes	No	
MUNICIPALITY	X		MUNICIPALITY NAME: Mafikeng
BOREHOLE	X		WATER USE LISENCE: Not Available
PRESSURE	TBC		BARS
TANKS	Number: 1	Total Capacity: 2000	LITERS
OTHER STORE	Yes	No	Specify below

SANITATION/ SEWER

	Yes	No	
MUNICIPALITY	X		MUNICIPALITY NAME: Mafikeng
SEPTIC TANKS		X	CAPACITY: M3
PIT LATRINES		X	
OTHER			SPECIFY:

SITE INFORMATION

ERF No.	747
COVERAGE	9.6 % (3442 m²)
VILLAGE NAME	Mmabatho Unit 2
DISTRICT	Ngaka Modiri Molema
COORDINATES	25°50'15.5"S 25°35'29.7"E

STAGES

SIPDM	SACAP	Mark with X
0		
1		
2		
3	1	
4	2	X
5	3	
6	4	
7	5	
8		
9	6	

PROJECT TEAM

	COMPETENT CONTACT PERSON	CONTACT No.	REGISTRATION No.	COMPANY NAME
ARCHITECT	DANNY KALOMBO	+27 79 875 8873	PR.Arch 24740538	MAMADI & COMPANY
Q. SURVEYOR	HENK DOKTER	+27 82 807 9005	570 - SCQS	MAMADI & COMPANY
STRUCT. ENG	THABISO MOTSHEGOA	+27 73 757 8094	201370184 - ECSA	MAMADI & COMPANY
CIVIL ENG	GIVEN MBHOKOTA	+27 83 580 1709	201470013 - ECSA	MAMADI & COMPANY
MECH. ENG	PULE SHEANE	+27 72 172 8396	201570022 - ECSA	MAMADI & COMPANY
ELECT. ENG	JOHN MOKOENA	+27 63 005 5891	20030038 - ECSA	MAMADI & COMPANY
OHS	NATHANIEL MATHAGA	+27 72 947 7939	CHS 1400005	MAMADI & COMPANY
CONTRACTOR				

GSPublisherVersion 0.0.100.100