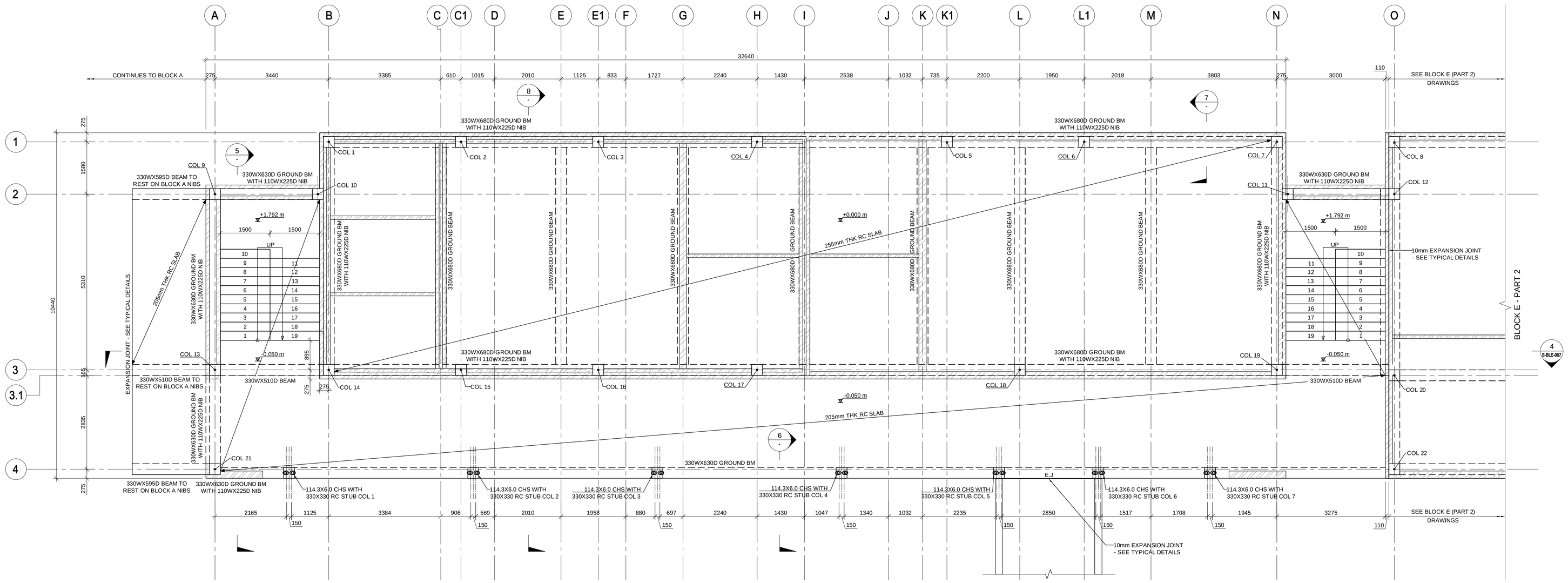

03 - Ground Floor Layout

1 : 50

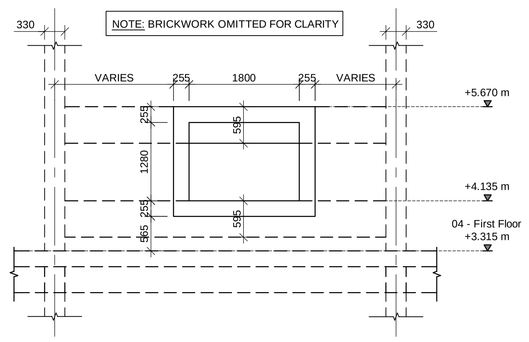

Typical Elevation of Eyelid

1 : 50

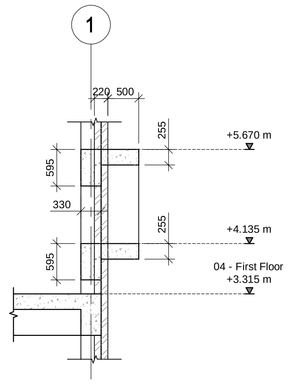

Typical Section Through Eyelid

1 : 50

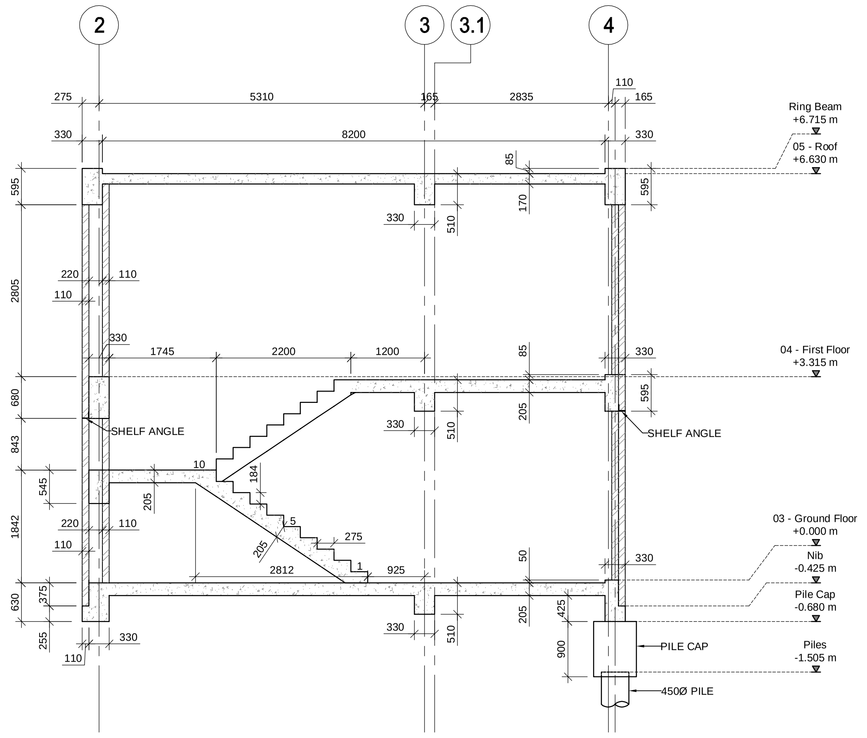

SECTION 5

1 : 50

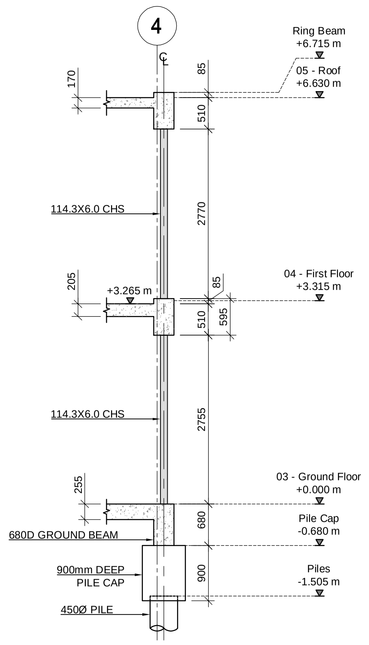

SECTION 6

1 : 50

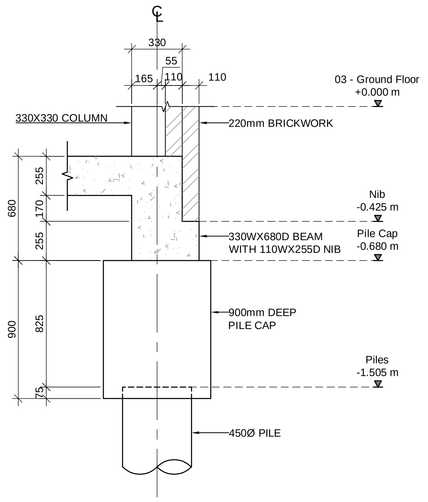

SECTION 7

1 : 20

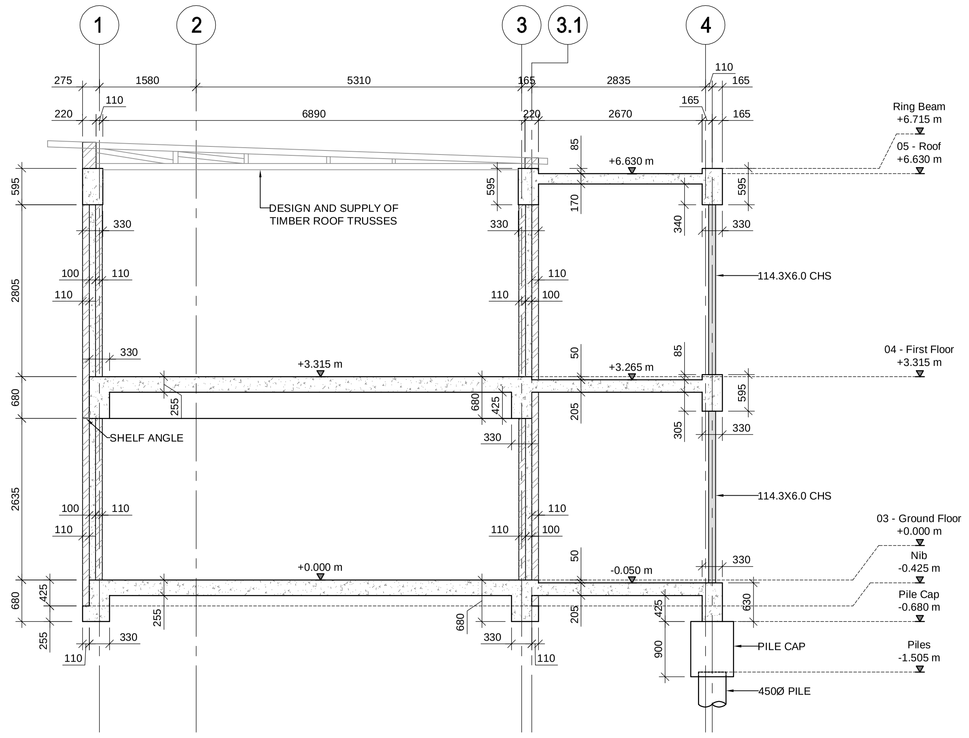

SECTION 8

1 : 50

Issued For Tender

Client

KWAZULU-NATAL PROVINCE
EDUCATION
REPUBLIC OF SOUTH AFRICA

Implementing Agent

DBSA
DEVELOPMENT BANK OF SOUTHERN AFRICA
Building Africa's Prosperity

Notes:

Refer to General Notes on Sheet Number S-000

Concrete:
- Cover - 60mm
- Strength - 40MPa/19mm

Datum - 4.230 m.s.l

E.J = 10mm Expansion Joint

No	Amendment	Date	App.

Project Manager

MPAMOT (Pty) Ltd
2nd Floor, South Wing, 147 Bram Fischer Drive
PO Box 3923, Randburg, 2125, South Africa
t +27 11 781 9710 f +27 11 781 9711
www.mpamot.co.za
Reg No: 1997/009813/07

CESA

Discipline:

Project

Maritime School Of Excellence

Drawing Title

Block E (Part 1)
Ground Floor Layout, Sections and Details

Division Head: Approver	Designed by:	I Singh
Pr Eng No:	Drawn by:	I Singh
Date: 14/10/2021	Checked by:	E Tromp
Scale: AS SHOWN	Drawing No: 2025-S-BLE-003	Rev: OB

© MPAMOT PTY LTD
This document is issued for the party which commissioned it and for the specific purpose connected with the above-captioned project only. It should not be relied upon by any other party or used for any other purpose. We accept no responsibility for the consequences of this document being relied upon by any other party, or being used for any other purpose, or containing any error or ommission which is due to an error or ommission in data supplied to us by the other parties.
This document contains confidential information and proprietary intellectual property. It should not be shown to other parties without consent from us and the party which commissioned it.