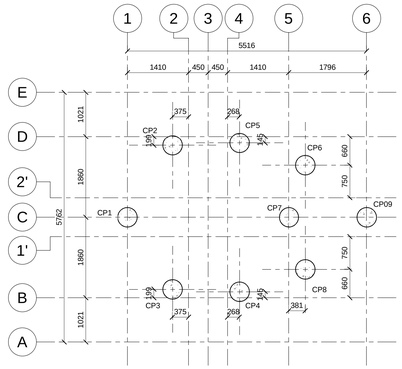

01 - PILING LAYOUT
1 : 50

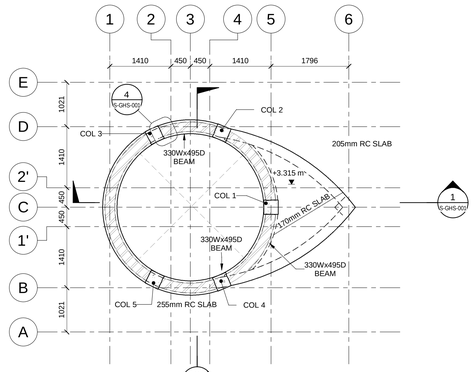

LOWER ROOF PLAN
1 : 50

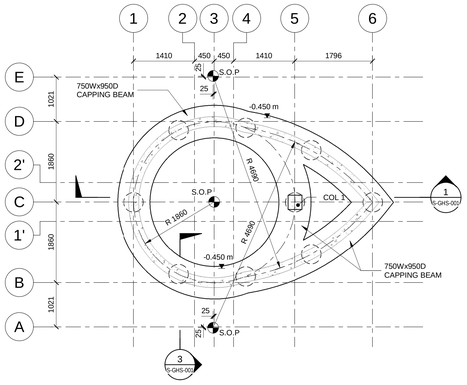

02 - PILE CAP LAYOUT
1 : 50

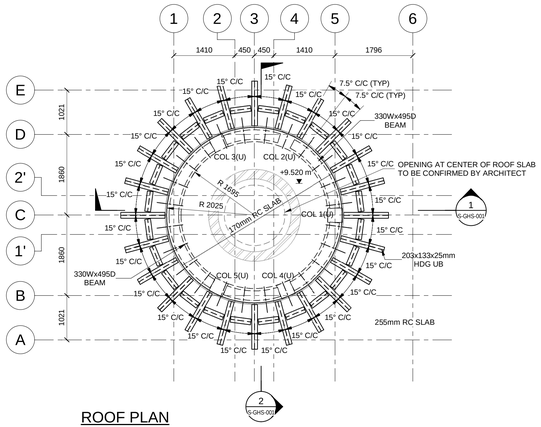

ROOF PLAN
1 : 50

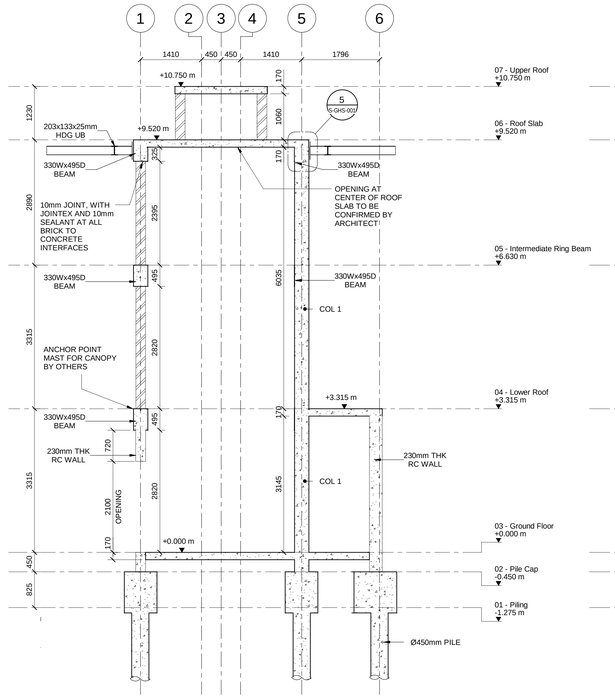

LONGITUDINAL SECTION 01
1 : 50

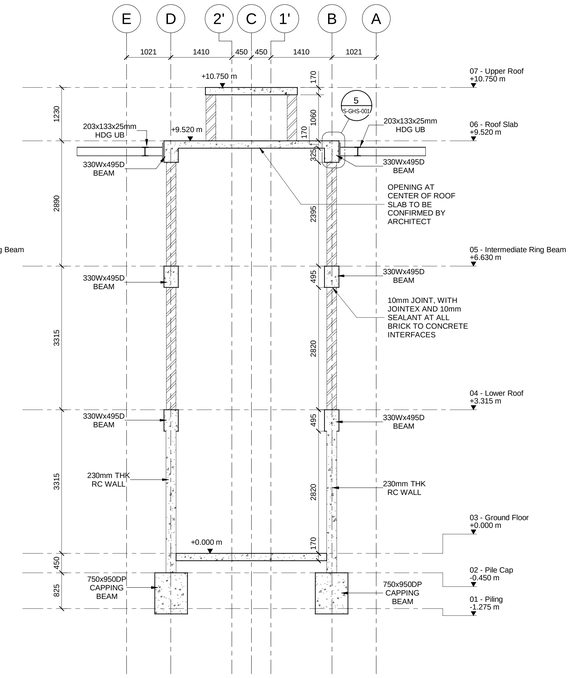

CROSS SECTION 02
1 : 50

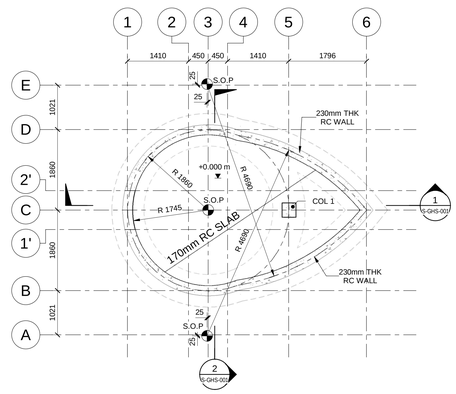

GROUND FLOOR PLAN
1 : 50

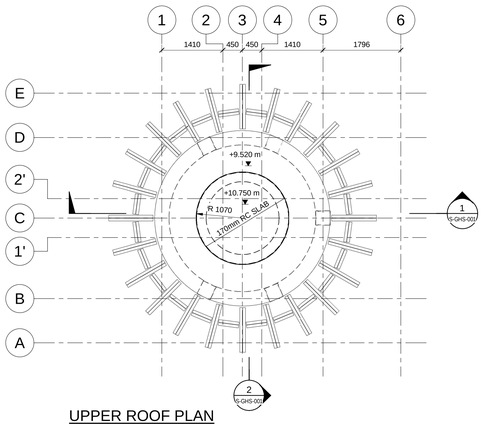

UPPER ROOF PLAN
1 : 50

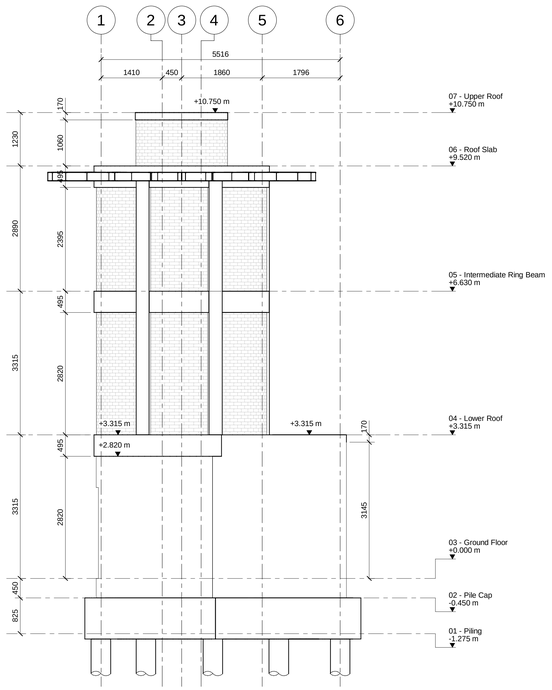

SOUTH ELEVATION
1 : 50

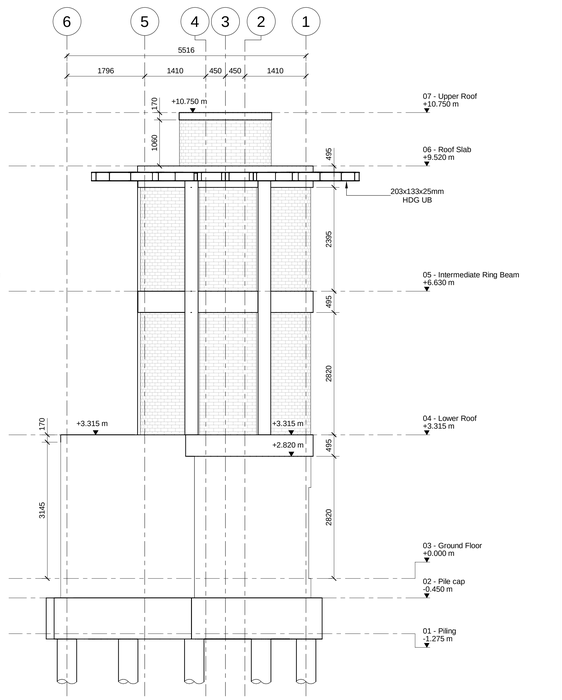

NORTH ELEVATION
1 : 50

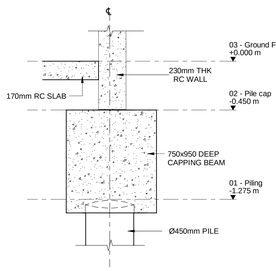

DETAIL SECTION 03
1 : 20

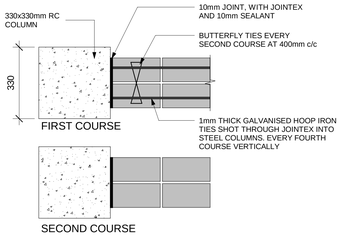

DETAIL 04 - BRICKWORK INTERFACE WITH COULUMN
1 : 10

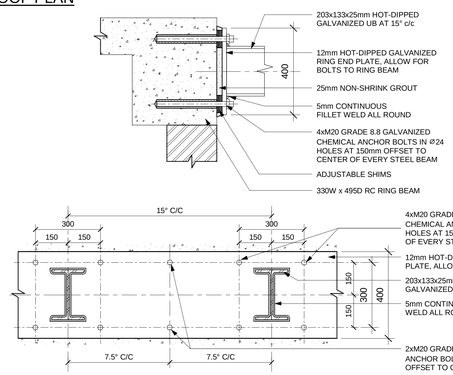

DETAIL 05 - STEEL BEAM ENDPLATE DETAIL
1 : 10

Client

KWAZULU-NATAL PROVINCE
EDUCATION
REPUBLIC OF SOUTH AFRICA

Implementing Agent

DBSA
DEVELOPMENT BANK OF SOUTHERN AFRICA
Building Africa's Prosperity

Notes:
Refer to General Notes on Sheet Number S-000

Piles:
- 450Ø piles
- 800kN Capacity
- Min Cover 60mm

Concrete:
- Cover - 60mm
- Strength - 40MPa/19mm

Datum - 4.230 msl

Steel:
- Steel to be to SABS 1431,GRADE S355JR
- Site connections min M10 BOLTS U.O.N.
- Structural steel-M16 bolts: grade 8.8 U.O.N
- Welding: 6mm continuous fillet weld U.O.N. details to engineers' specification.
- All steelwork to be galvanized SANS 121/ISO1461

No	Amendment	Date	App.
0A	ISSUED FOR INFORMATION	18-10-2021	E.T
0B	ISSUED FOR TENDER	24-11-2021	ET

Project Manager

MPAMOT (Pty) Ltd
2nd Floor, South Wing, 147 Bram Fischer Drive
PO Box 3923, Randburg, 2125, South Africa
t +27 11 781 9710 f +27 11 781 9711
www.mpamot.co.za
Reg No: 1997/009813/07

CESA

Discipline:

Project
Maritime School Of Excellence

Drawing Title
Gate House Plans Sections Elevations and Details

Division Head: E Tromp	Designed by:	A Samker
	Drawn by:	A Nzimande
Pr Eng No:	Checked by:	E Tromp
Date: 04/14/21		
Scale: As indicated	Drawing No: 2025- S-GHS-001	Rev: 0B

Issued For Tender

© MPAMOT PTY LTD
This document is issued for the party which commissioned it and for the specific purpose connected with the above-captioned project only. It should not be relied upon by any other party or used for any other purpose. We accept no responsibility for the consequences of this document being relied upon by any other party, or being used for any other purpose, or containing any error or ommission which is due to an error or ommission in data supplied to us by the other parties.
This document contains confidential information and proprietary intellectual property. It should not be shown to other parties without consent from us and the party which commissioned it.

C:\Users\rs1209\MPAMOT (Pty) Ltd\Maritime School of Excellence - Team Documents\Structures\Drawings\Revit Models\Gate House\2022\Gate House.rvt