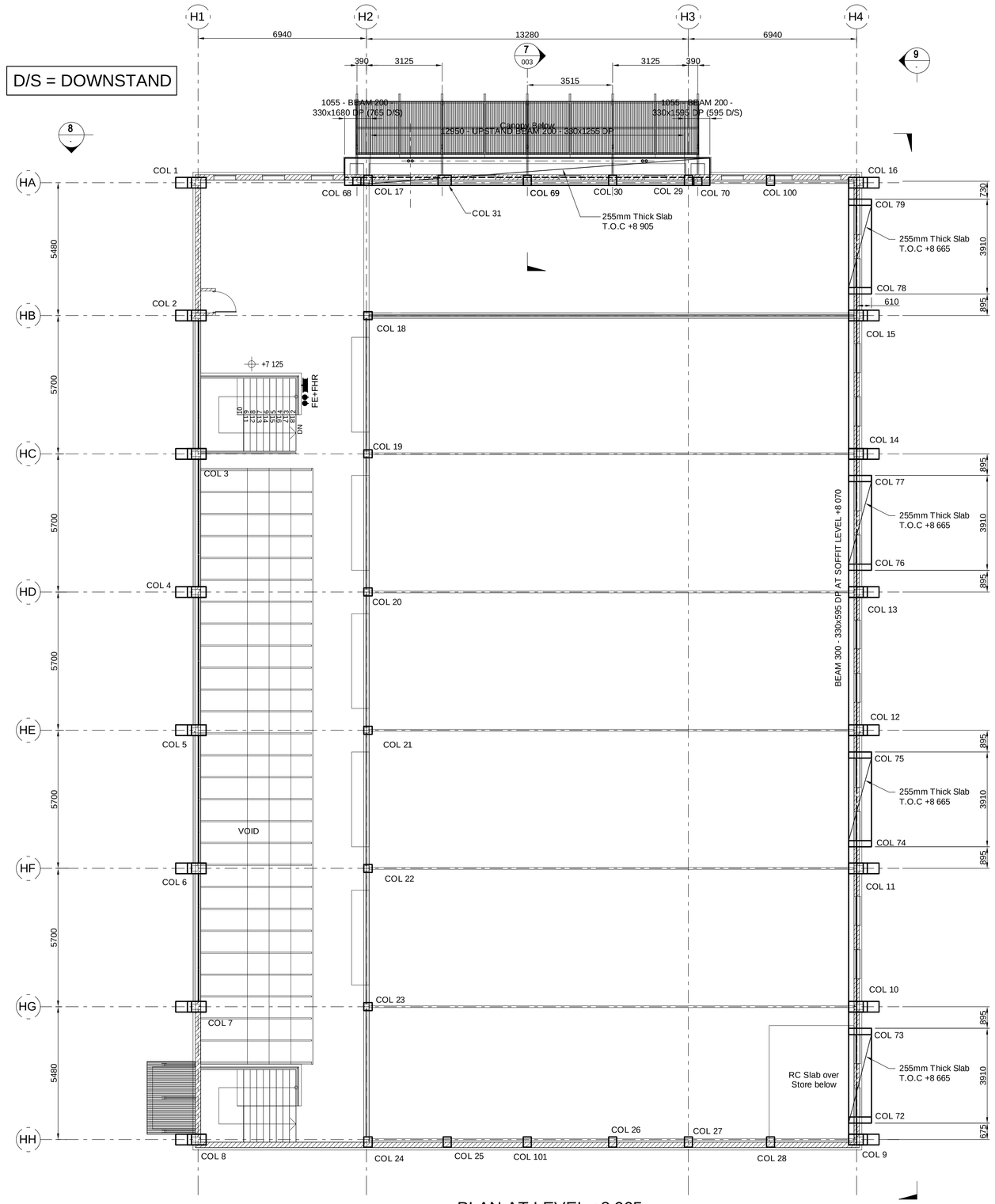

PLAN AT LEVEL +8 905

SCALE - 1:100

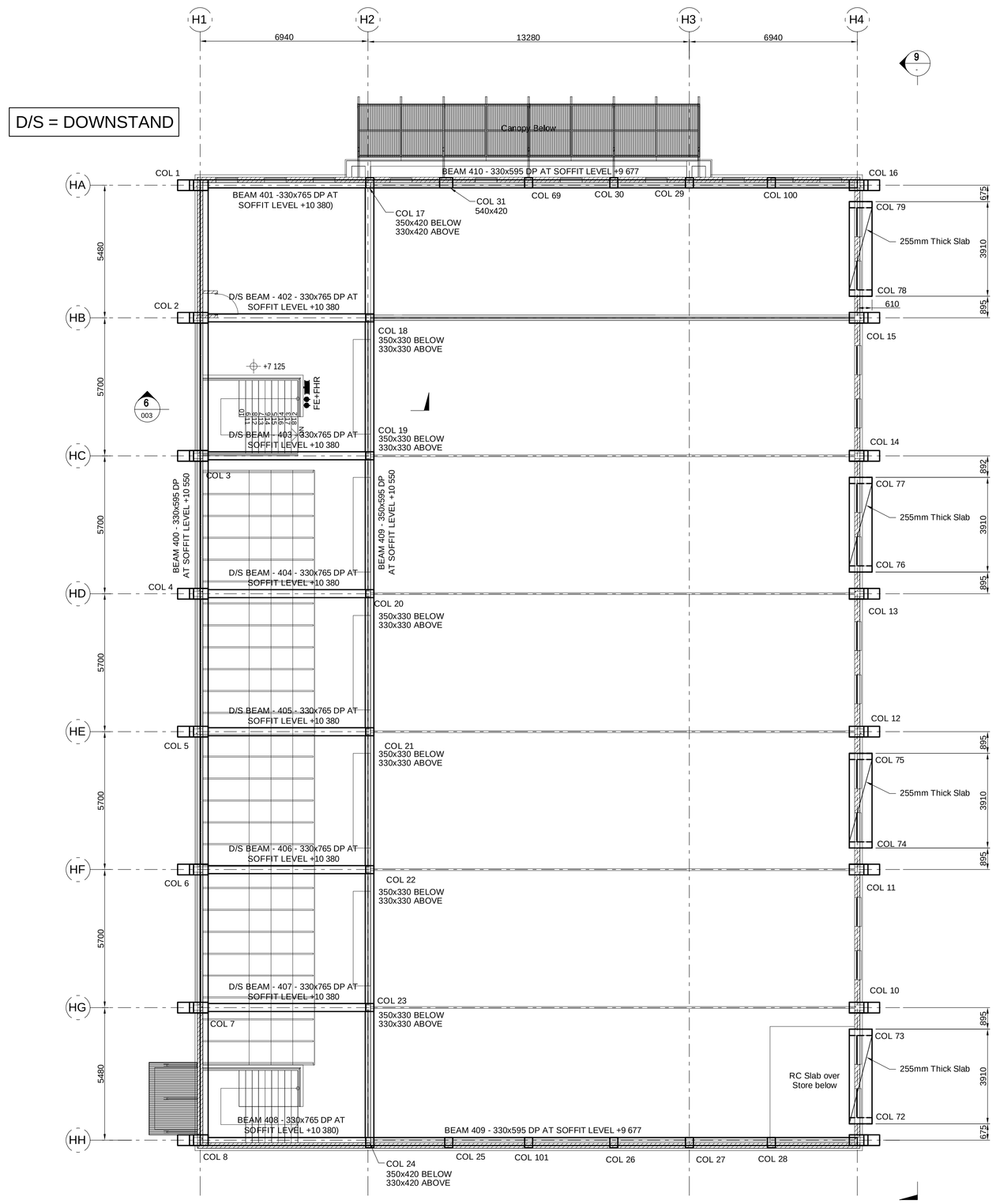

PLAN AT LEVEL +11 145

SCALE - 1:100

COLUMN NOTES:

- Columns 1 to 16 - 600x440
- Columns 25 to 28, 30, 69, 100, 101, 69 - 330x420
- Columns 17 & 24 - 350x420 up to level +11 145. Above level +11 145 columns are 330x420
- Columns 18 to 23 - 350x330 up to level +11 145. Above level +11 145 columns are 330x330
- Columns 31- 540x420
- Column 72 to 79 - 940x255

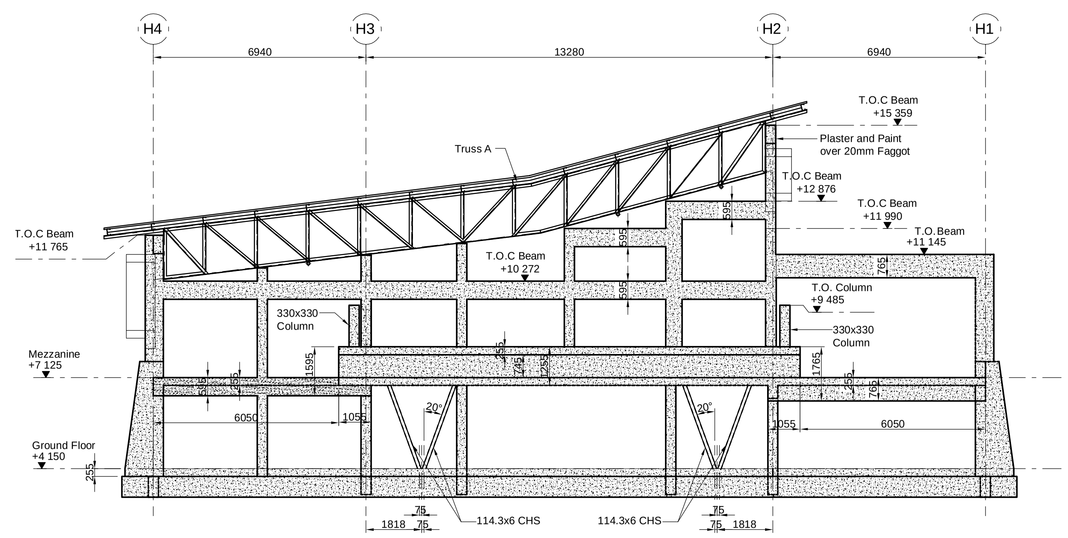

ELEVATION 8

SCALE - 1:100

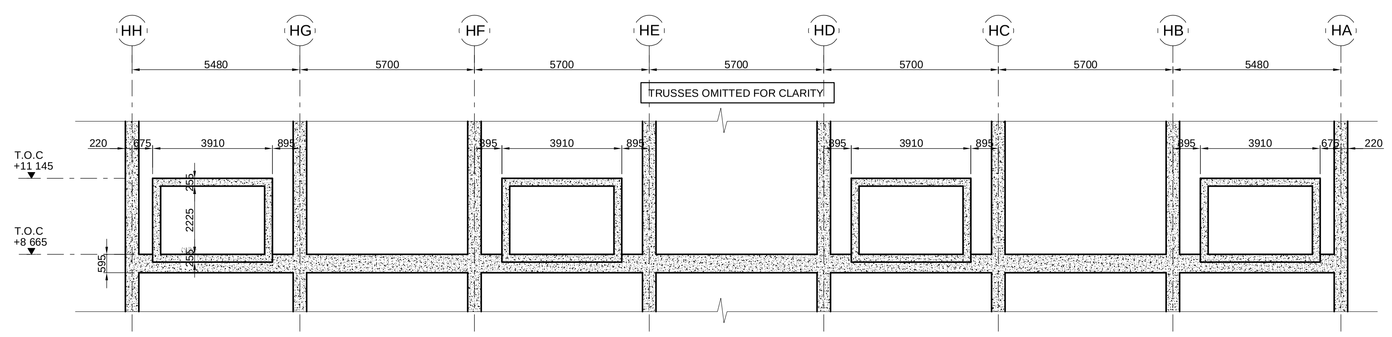

ELEVATION 9

SCALE - 1:100

Issued For Tender

Client

KWAZULU-NATAL PROVINCE
EDUCATION
REPUBLIC OF SOUTH AFRICA

Implementing Agent

DBSA
DEVELOPMENT BANK OF SOUTHERN AFRICA
Building Africa's Prosperity

Notes:
Refer to General Notes on Sheet Number S-000

Concrete:
- Cover 60mm
- Strength - 40MPa / 19

No	Amendment	Date	App.
OB	Issued for TENDER	10/11/21	ET

Project Manager

MPAMOT (Pty) Ltd
2nd Floor, South Wing, 147 Bram Fischer Drive
PO Box 3923, Randburg, 2125, South Africa
t +27 11 781 9710 f +27 11 781 9711
www.mpamot.co.za
Reg No: 1997/009813/07

CESA

Discipline:

Project

Maritime School Of Excellence

Drawing Title

Hall
Plans at Levels +8 905 and +11 320

Division Head: Approver

Pr Eng No:

Date: 14/10/21

Designed by:	V Rampersadh
Drawn by:	V Rampersadh
Checked by:	E Tromp

Scale 1 : 50

Drawing No: 2025- S-HLL-004

Rev: OB

© MPAMOT PTY LTD
This document is issued for the party which commissioned it and for the specific purpose connected with the above-captioned project only. It should not be relied upon by any other party or used for any other purpose. We accept no responsibility for the consequences of this document being relied upon by any other party, or being used for any other purpose, or containing any error or ommission which is due to an error or ommission in data supplied to us by the other parties.
This document contains confidential information and proprietary intellectual property. It should not be shown to other parties without consent from us and the party which commissioned it.

C:\Users\Jum65742\Matt MacDonald\Maritime School of Excellence - Team Documents\Structures\Drawings\Revit Models\Block B\BLOCK B.rvt