School Furniture Specifications

Technical Drawings and Manufacturing Notes

dennis

basic education

Department:
Basic Education
REBUBLIC OF SOUTH AFRICA

SINGLE SECONDARY STACKABLE TABLE GRADE 7-12

Note:

1. TABLE TOP – 21MM SOLID SALIGNA HARDWOOD (Eucalyptus Grendles)
2. Ø 25X1.6MM TUBING STACKABLE STEEL FRAME WITH BAKED LIGHT GREY EPOXY/POLYESTER POWDER COATING FINISH
3. DURABLE PLUGS FITTED TO ALL OPEN ENDS
4. PENCIL GROOVE 16X3MM
5. ALL TIMBER COMPONENTS TO BE VARNISHED WITH TWO COATS OF ACID CATALYSED LACCUER
6. FIT TOOP STEEL FRAME WITH APPROACHED SCREWS
7. TABLE MUST COMPLY WITH SANS 660:2004 (Edition 3.2)

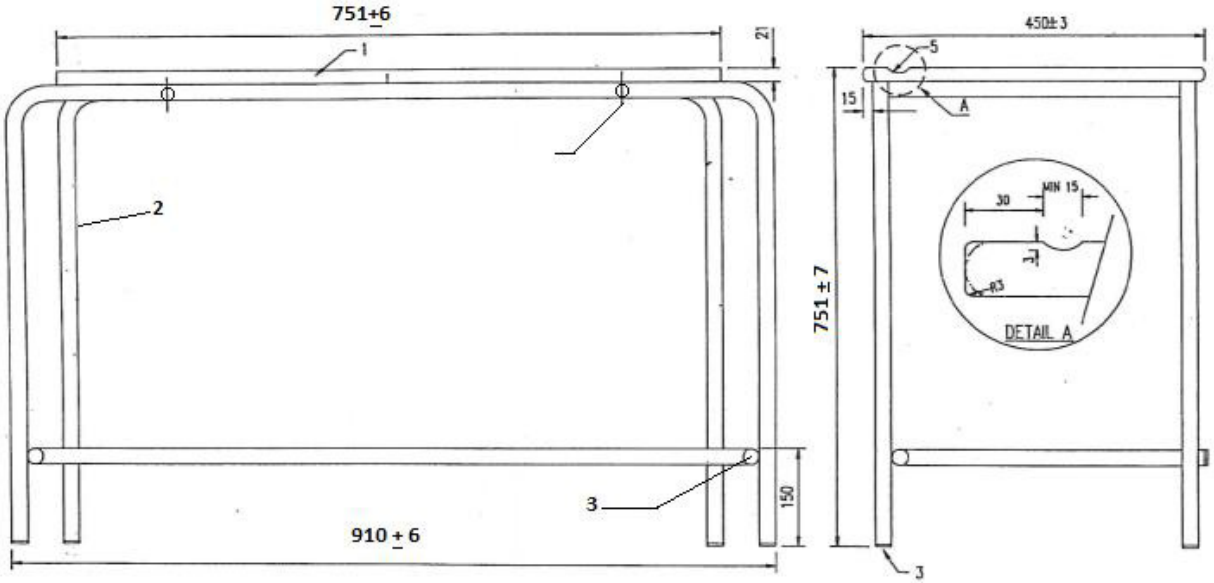

ISSUE	DATE	CHANGE	SPECIFIED TOLERENCES			
				GRADE 7-12 X NO MEASUREMENTS TO BE SCALED FROM THE DRAWING	***SINGLE STACKABLE SECONDARY SCHOOL TABLE***	

basic education
Department:
Basic Education
REBUBLIC OF SOUTH AFRICA

CHAIR DINING AND SCHOOL HALL

Note:

1. SEAT INJECTION MOULDED POLYPROPYLENE COPOLYMER
2. STACKABLE STEEL FRAME Ø 19.05X1.6MM TUBING WITH BAKED LIGHT GREY EPOXY/POLYESTER POWDER COATING FINISH
3. DURABLE FERRULES FITTED TO ALL LEG ENDS
4. FIT SEAT TO STEEL FRAME WITH APPROVED SCREWS.
5. CHAIR MUST COMPLY WITH SANS 660:2004 (Edition 3.2)

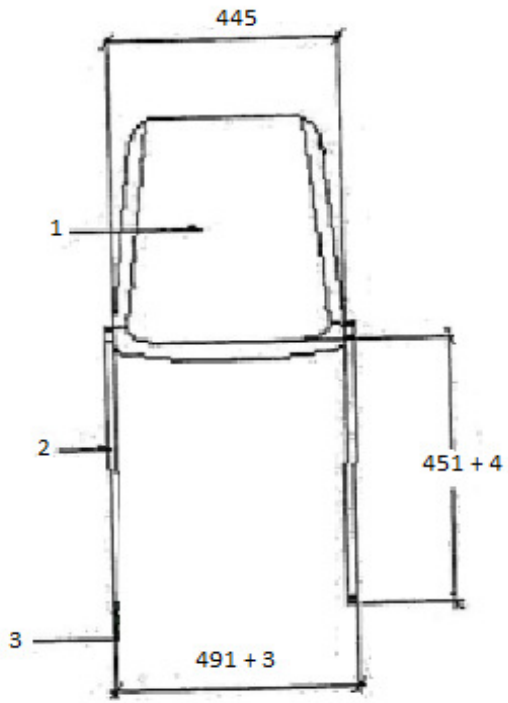

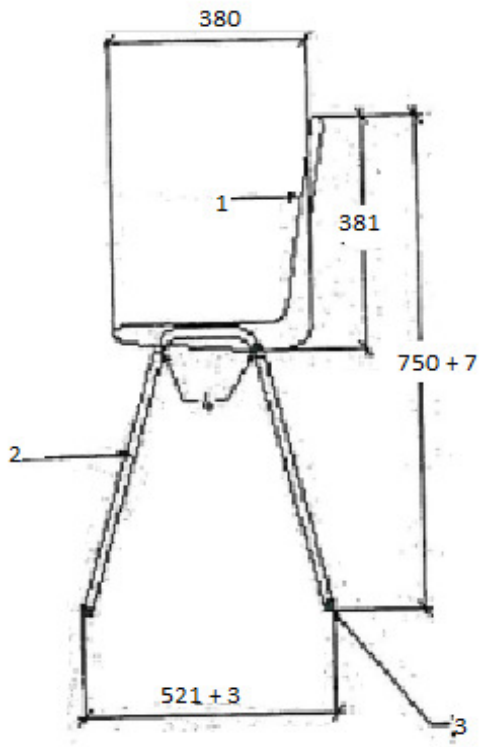

ISSUE	DATE	CHANGE	SPECIFIED TOLERENCES			
			"FIGURE" =+/- 1.2 "FIGURE" =+/- 1.5 "FIGURE" =+/- 1.1 UNSPECIFIED TOLERENCES =+/- 2.1	**DINING AND SCHOOL HALL GRADE 7-12** X NO MEASUREMENTS TO BE SCALED FROM THE DRAWING	***LARGE SECONDARY STACKABLE SCHOOL CHAIR***	

basic education
Department:
Basic Education
REBUBLIC OF SOUTH AFRICA

CHAIR LAB GRADE 7-12

Note:

1. Ø300MM POLYPROPYLENE COPOLYMER INJECTION MOULDED SEAT TO BE FITTED BY MEANS OF POP RIVETS (REF 2.1.8)
2. Ø25X1.6MM STEEL TUBING WITH BAKED POLYYESTER/EPOXY LIGHT GREY POWDER COATING (REF 2.1.18/19)
3. Ø10MM STEEL ROD
4. NYLON PLUGS TO ALL LEG ENDS (REF 2.1.20)

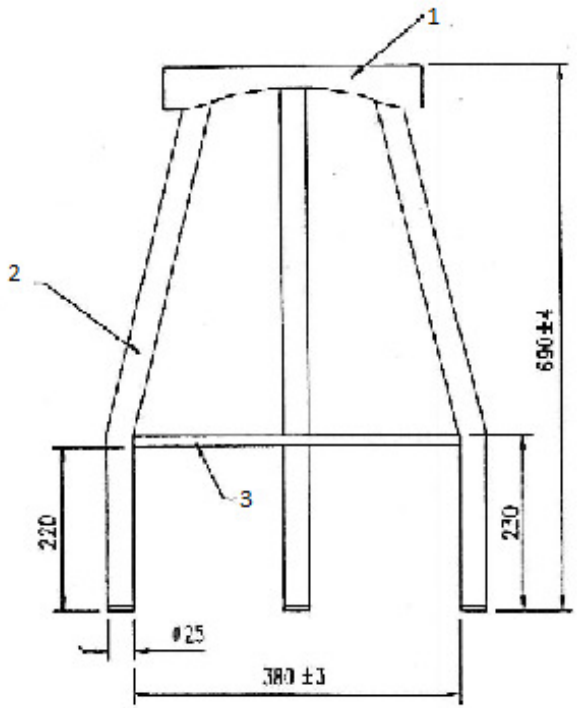

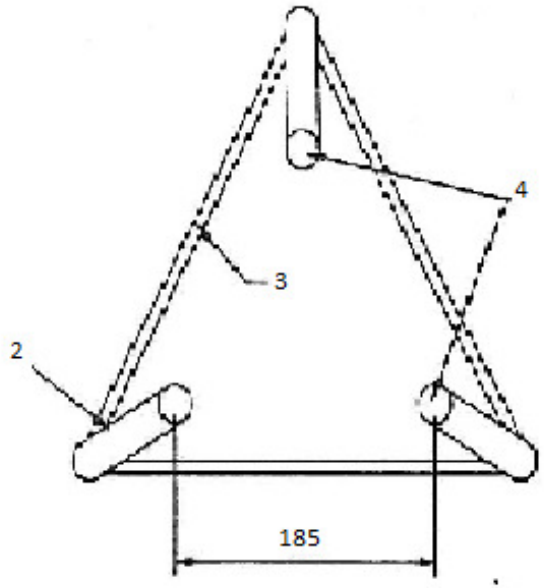

ISSUE	DATE	CHANGE	SPECIFIED TOLERENCES			
				GRADE 7-12 X NO MEASUREMENTS TO BE SCALED FROM THE DRAWING	***LAB CHAIR***	

basic education
Department:
Basic Education
REBUBLIC OF SOUTH AFRICA

STUDENT TYPIST CHAIR W/O WHEELS GRADE 7-12

Note:

1. SEAT INJECTION MOULDED POLYPROPYLENE COPOLYMER (REF.2.1.8) ORANGE
2. STEEL FRAME: Ø 19X1.6mm WITH BAKED LIGHT GREY POLYESTER/EPOXY POWDER COATING (REF.2.1.18/19)
3. ADJUSTABLE BY MEANS OF A SPINDLE FITTED INTO A TAPERED BUSH
4. NYLON PLUGS TO ALLLEG ENDS (REF.2.1.20)
5. SEAT FASTEN WITH TAMPERED PROOF SCREWS TO SEAT FRAME

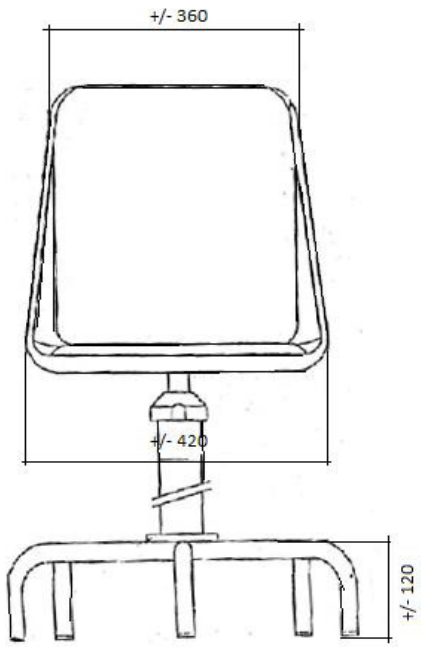

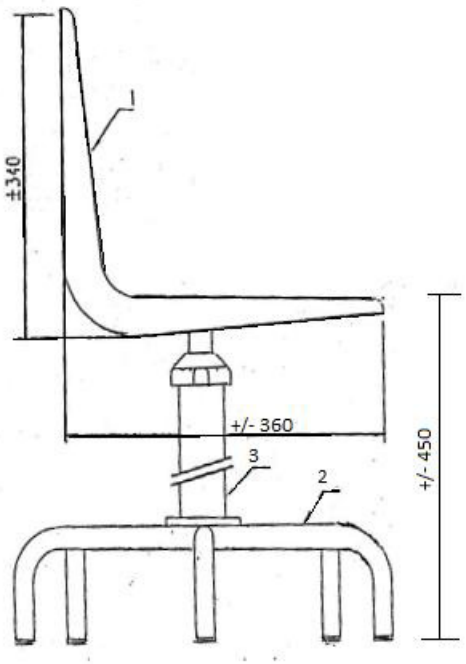

ISSUE	DATE	CHANGE	SPECIFIED TOLERENCES			
				STUDENT TYPIST CHAIR W/O WHEELS GRADE 7-12 X NO MEASUREMENTS TO BE SCALED FROM THE DRAWING	***MOULDED POLYPROPYLENE, STEEL FRAME***	

basic education
Department:
Basic Education
REBUBLIC OF SOUTH AFRICA

TEACHER'S CHAIR

Note:

1. SEAT AND BACK APPROVED FOAM (SEAT MINIMUM 23KG) BACK MINIMUM 16KG) AND UPHOLSTERY (100% POLYPROPOLENE – CONTRACT QUALITY) FOAM TO BE GLUED ONTO 16MM PARTICLE BOARD
2. STACKABLE STEEL FRAME ASSEMBLY: 22.23X1.2MM SQUARE TUBING WITH BAKED BLACK EPOXY/POLTIESTER POWDER COATING FINISH.
3. DURABLE PLUGS FITTED TO ALL OPEN STEEL ENDS
4. SEAT FITTED TO STEEL FRAME WITH APPROVED SCREWS
5. BACK FITTED WITH BOLTS & T-NUTS TO STEEL FRAME
6. CHAIR TO COMPLY WITH SANS/SABS 1244:1979

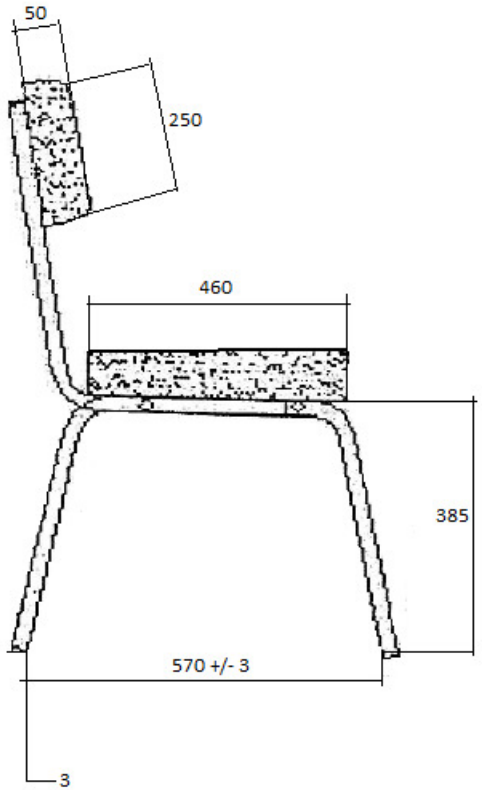

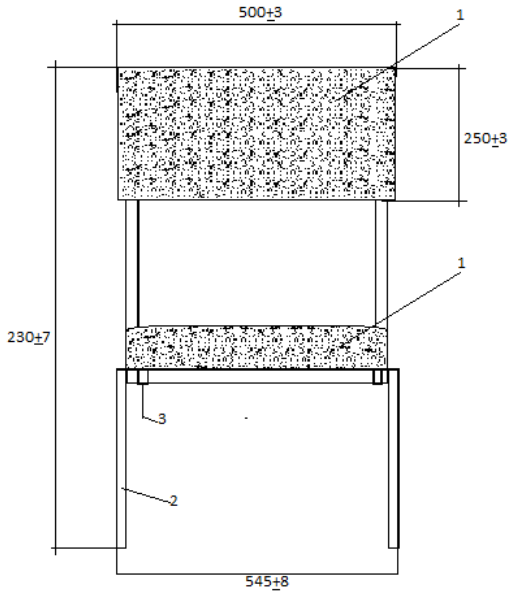

ISSUE	DATE	CHANGE	SPECIFIED TOLERENCES			
				TEACHER'S CHAIR X NO MEASUREMENTS TO BE SCALED FROM THE DRAWING	***UPHOLSTERED CHAIR WITHOUT ARMS***	

basic education
Department:
Basic Education
REBUBLIC OF SOUTH AFRICA

TEACHER'S OFFICE/STAFF ROOM DESK

Note:

1. TABLE TOP – 21MM SOLID HARDWOOD,
2. MODESTY PANEL AND DRAWER BOX CARCASS MANUFACTURED FROM MATCHING 16MM SUBSTRATE VENEER BOARD ALL EDGES SEALED WITH MATCHING VEENER
3. 32X1.6MM SQUARE TUBING FRAME WITH BAKED BLACK EPOXY/POLYESTER POWDER COATING FINISH
4. DURABLE PLUGS FITTED TO ALL LEGS ENDS
5. 21MM SOLID SALIGNA HARDWOOD DRAWER FRONTS, TOP DRAWER LOCKABLE (APPROVED LOCK)
6. APPROVED HANDLE AND DRAWER SLIDES
7. KNOCK-DOWN "PRISMA" FITTING
8. MODESTY PANEL TO BE SECURED TO STEEL FRAME WITH 4.8X27MM LARGE FLANGE POP REVETS
9. ALL TIMBER COMPONENTS TO BE VARBISHED WITH TWO COATS OF ACD CATALYSED LACQUER
10. FIT TOP TO STEEL FRAME WITH APPROVED SCREWS
11. DESK MUST COMPLY WITH SABS 1528-2:1998 (EDITION 1.1)

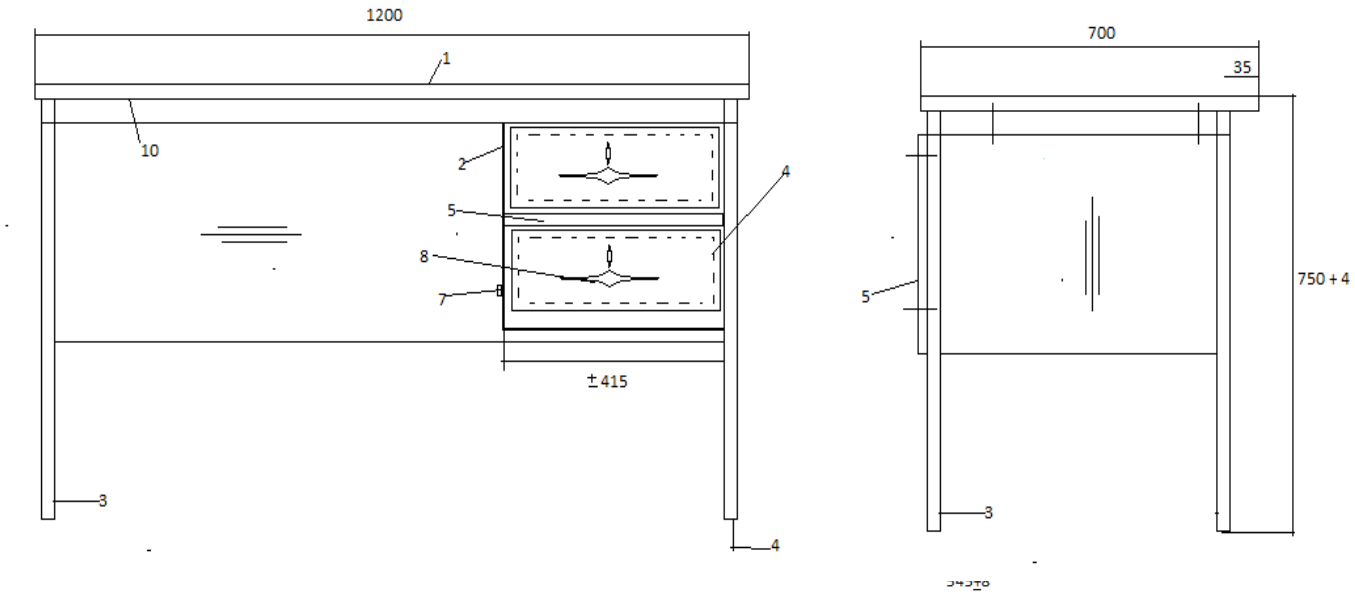

ISSUE	DATE	CHANGE	SPECIFIED TOLERENCES			
			FIGURE- +/- 1.2 FIGURE- +/- 1.2 FIGURE- +/- 1.2	**TEACHER'S DESK** X NO MEASUREMENTS TO BE SCALED FROM THE DRAWING	***TEACHER'S DESK WITH 2 DRAWERS***	

basic education
Department:
Basic Education
REBUBLIC OF SOUTH AFRICA

TEACHER'S CLASSROOM DESK

Note:

1. TABLE TOP – 21MM SOLID HARDWOOD,
2. DRAWERS MANUFACTURED FROM MATCHING 16MM SUBSTRATE VENEER BOARD ALL EDGES SEALED WITH MATCHING VEENER
3. 21MM SOLID SALIGNA HARDWOOD DRAWER FRONTS, BOTH DRAWERS LOCKABLE (APPROVED LOCK)
4. APPROVED HANDLE
5. KNOCK-DOWN "PRISMA" FITTING
6. ALL TIMBER COMPONENTS TO BE VARBISHED WITH TWO COATS OF ACD CATALYSED LACQUER
7. DESK MUST COMPLY WITH SABS 1528-2:1998 (EDITION 1.1)

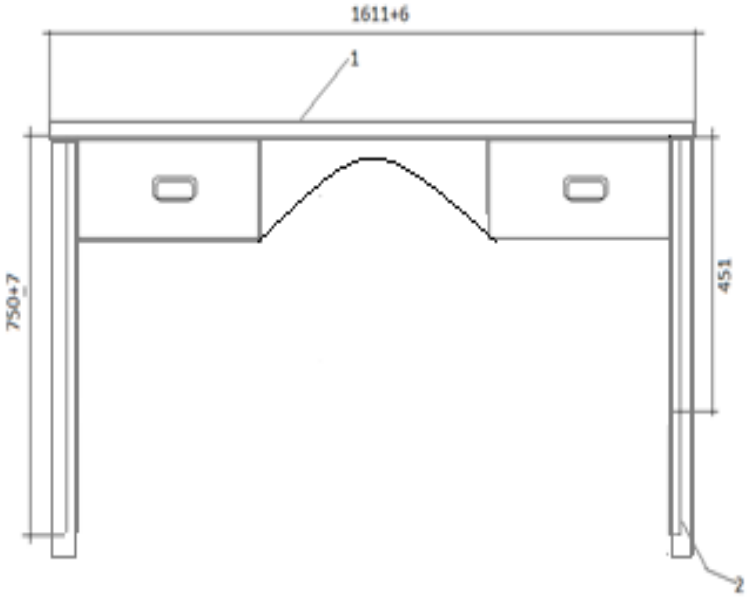

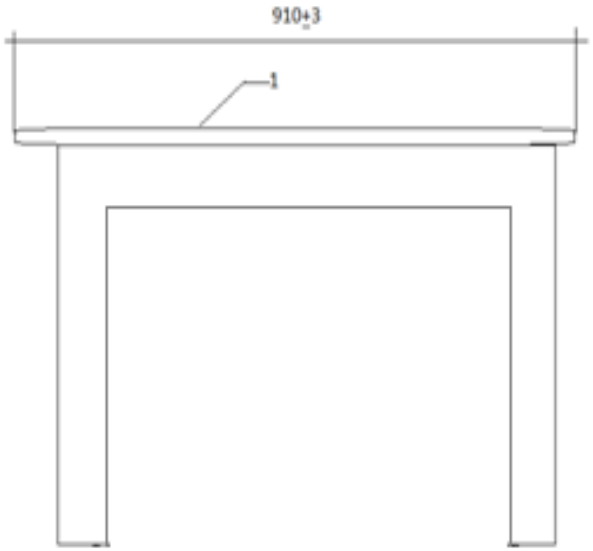

ISSUE	DATE	CHANGE	SPECIFIED TOLERENCES			
			FIGURE- +/- 1.2 FIGURE- +/- 1.2 FIGURE- +/- 1.2	**TEACHER'S DESK** X NO MEASUREMENTS TO BE SCALED FROM THE DRAWING	***TEACHER'S DESK WITH 1 DRAWERSON BOTH SIDE***	

basic education
Department:
Basic Education
REBUBLIC OF SOUTH AFRICA

STATIONERY CUPBOARD 2- DOOR/S - SHELVES

Note:

1. CARCASS (TOP, BOTTOM, DOORS, SIDES AND SHELVES) MANUFACTURING FROM 16MM DOUBLE MELAMINE FACED (NATURAL OAK) PARTICLE BOARD. ALL EDGES SEALED WITH MATCHING PVC EDGING.
2. BACK (GROOVED AND GLUED IN) MANUFACTURED FROM 12MM DOUBLE SIDED MELAMINE FACED (NATURAL OAK) PARTICLE BOARD
3. APPROVED SOLID OAK CUP HANDLE
4. APPROVED ADJUSTABLE FEET
5. APPROVED CONCEALED HINGES
6. CUPBOARD MUST COMPLY WITH SABS 1528-3:1992

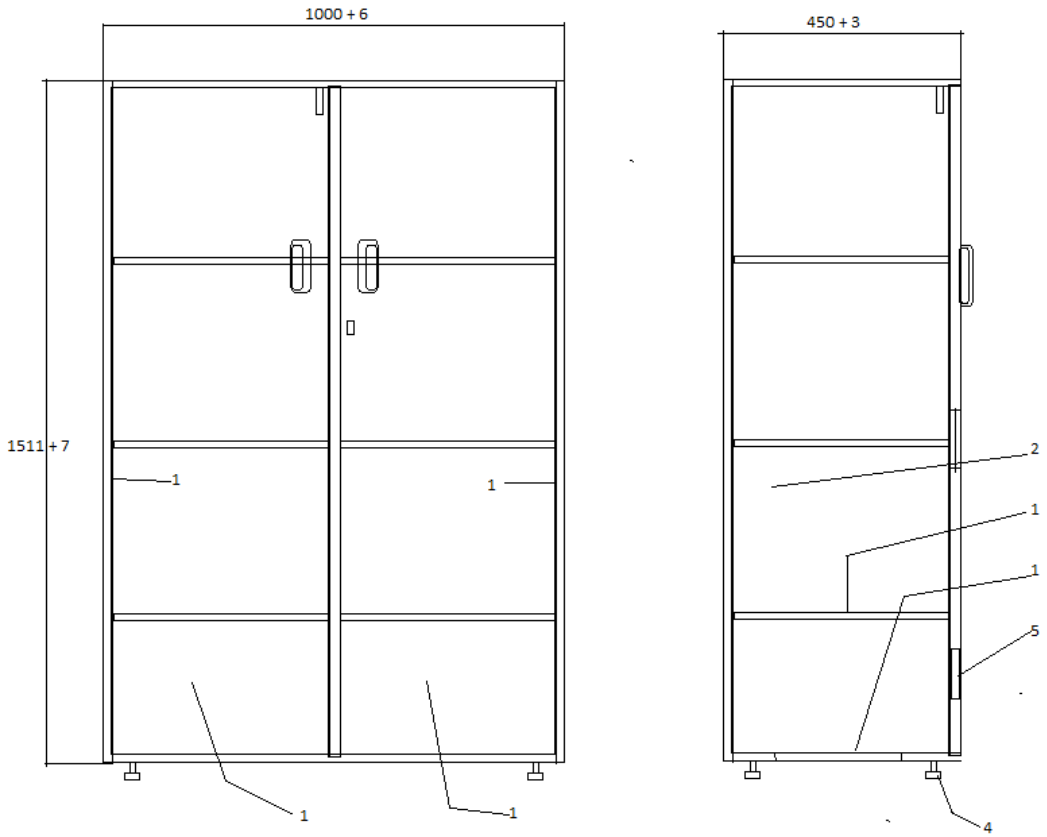

ISSUE	DATE	CHANGE	SPECIFIED TOLERENCES			
			"FIGURE" = +/- 1.2 "FIGURE" = +/- 1.5 "FIGURE" = +/- 1.1 UNSPECIFIED TOLERENCES =+/- 2.0	**HEADS OF DEPT** X NO MEASUREMENTS TO BE SCALED FROM THE DRAWING	***STATIONERY CUPBOARD 2- DOOR/S - SHELVES***	

basic education
Department:
Basic Education
REBUBLIC OF SOUTH AFRICA

STATIONERY CUPBOARD 2- DOOR/S - SHELVES

Note:

1. CARCASS (TOP, BOTTOM, DOORS, SIDES AND SHELVES) MANUFACTURING FROM 16MM DOUBLE MELAMINE FACED (NATURAL OAK) PARTICLE BOARD. ALL EDGES SEALED WITH MATCHING PVC EDGING.
2. BACK (GROOVED AND GLUED IN) MANUFACTURED FROM 12MM DOUBLE SIDED MELAMINE FACED (NATURAL OAK) PARTICLE BOARD
3. APPROVED SOLID OAK CUP HANDLE
4. APPROVED ADJUSTABLE FEET
5. APPROVED CONCEALED HINGES
6. CUPBOARD MUST COMPLY WITH SABS 1528-3:1992

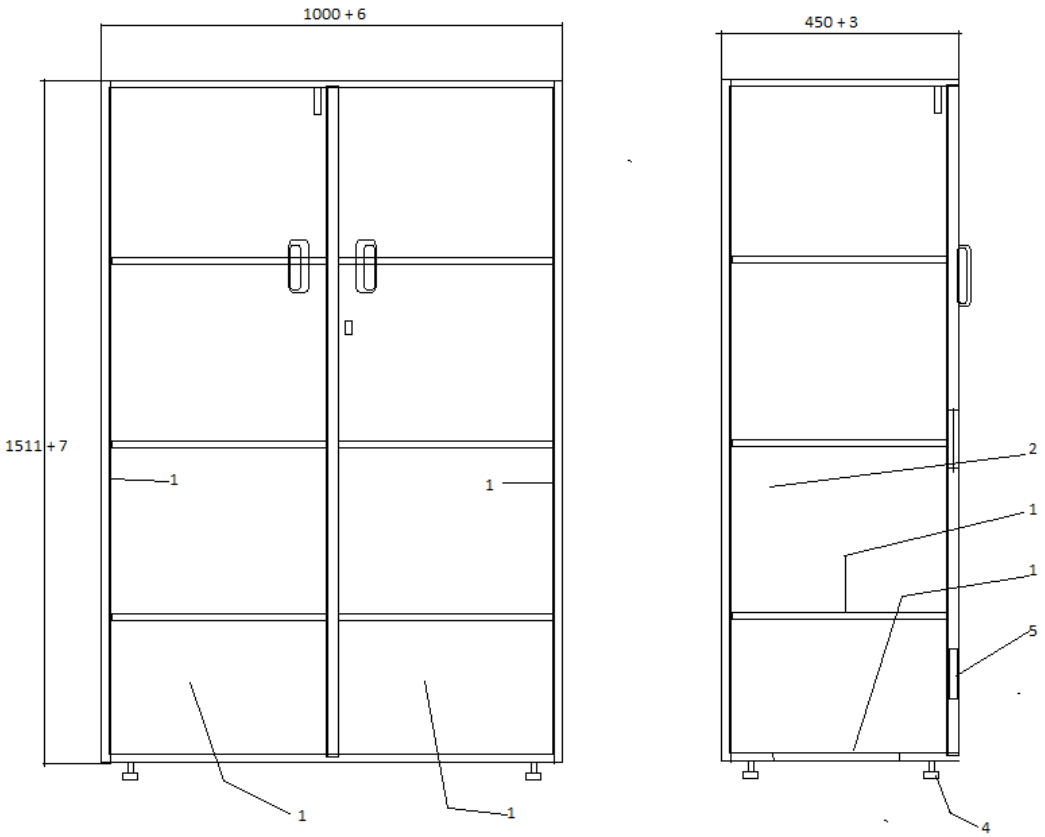

ISSUE	DATE	CHANGE	SPECIFIED TOLERENCES	PRINCIPALS	STATIONERY CUPBOARD 2- DOOR/S - SHELVES	
			"FIGURE" = +/- 1.2 "FIGURE" = +/- 1.5 "FIGURE" = +/- 1.1 UNSPECIFIED TOLERENCES =+/- 2.0	X NO MEASUREMENTS TO BE SCALED FROM THE DRAWING		

basic education
Department:
Basic Education
REBUBLIC OF SOUTH AFRICA

STEEL FRAME SINGLE BED

Specification on the Mattress:

1. Plastic Foam sponge
2. Stitch-bond PVC Cover made to SABS standards.
3. Mattress Size – 191CMX91CMX15CM

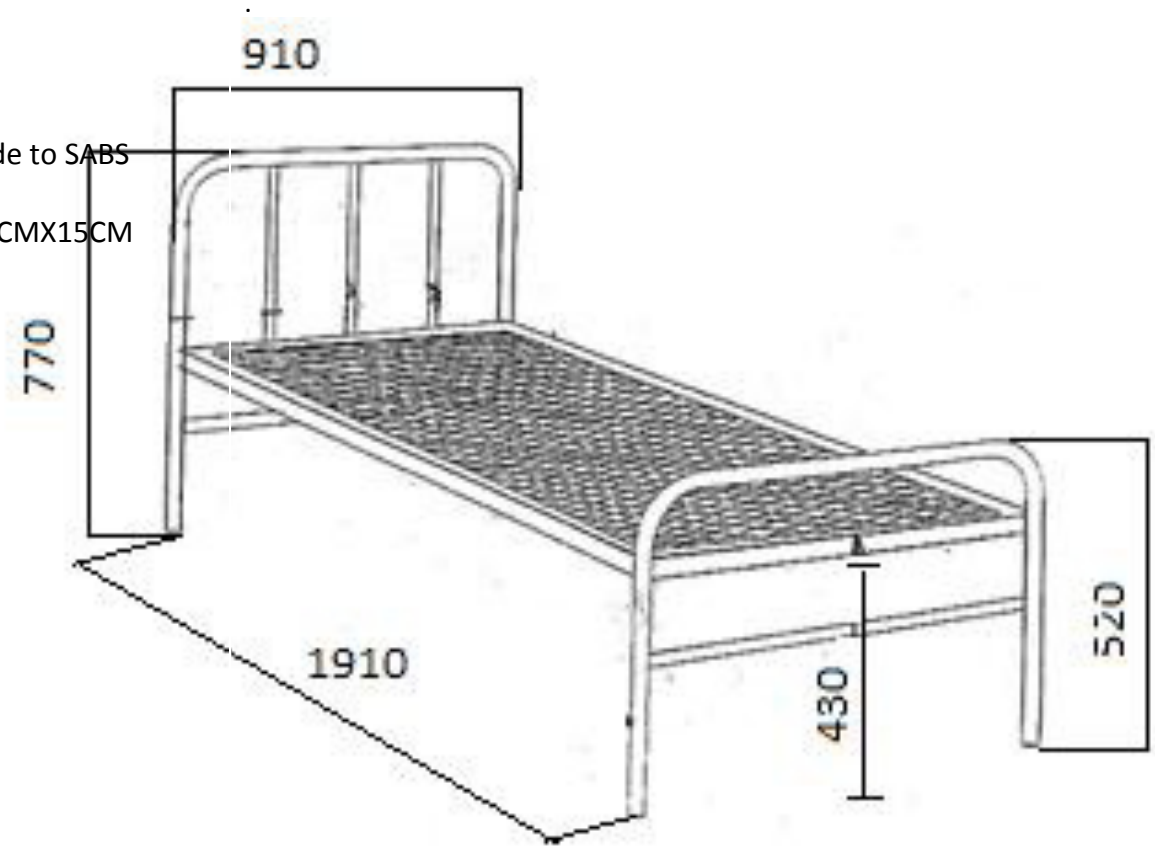

ISSUE	DATE	CHANGE	SPECIFIED TOLERENCES	SINGLE BED	*STEEL FRAME SINGLE BED*	
				X NO MEASUREMENTS TO BE SCALED FROM THE DRAWING		

basic education
Department:
Basic Education
REBUBLIC OF SOUTH AFRICA

PRINCIPAL CHAIR HIGH BACK

Note:

1. SEAT AND BACK APPROVED FOAM [SEAT (50MM THICK) MINIMUM] 23KG/M3; BACK(40MM THICK) MINIMUM 16KG/M3] AND UPHOLSTERY (100% POLYPROPYLENE – CONTRACT QUALITY) FOAM TO BE GLUED ONTO +/- 11MM SHAPED PLYWOOD SEAT AND BACK
2. STEEL FRAME; Ø25.4 X 1.6MM TUBING WITH BAKED BLACK EPOXY/POLYESTER POWDER COATING FINISH
3. DURABLE PLUGS FITTED TO ALL OPEN STEEL ENDS
4. APPROVED ARM RESTS TO BE FITTED TO STEEL FRAME
5. SEAT FITTED WITH BOLTS & T-NUTS TO STEEL FRAME
6. BACK FITTED WITH BOLTS & T-NUTS TO STEEL FRAME
7. SWIVEL & TILT MECHANISM
8. GAS HEIGHT ADJUSTABLE SPINDLE
9. FIVE (5) STAR REINFORCE NYLON BASE WITH DURABLE CASTORS
10. CHAIR TO COMPLY WITH SABS1528-1;1992

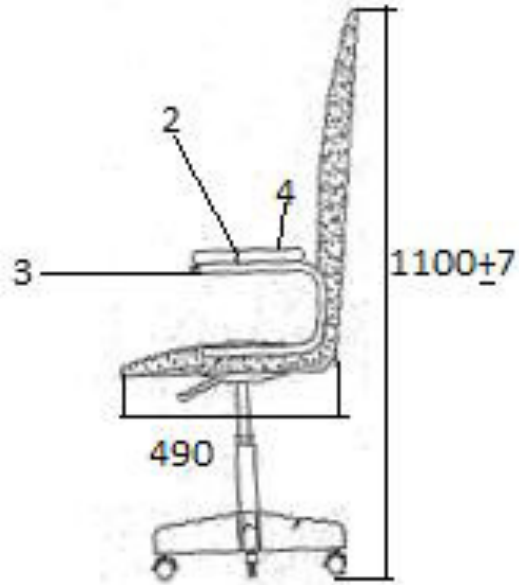

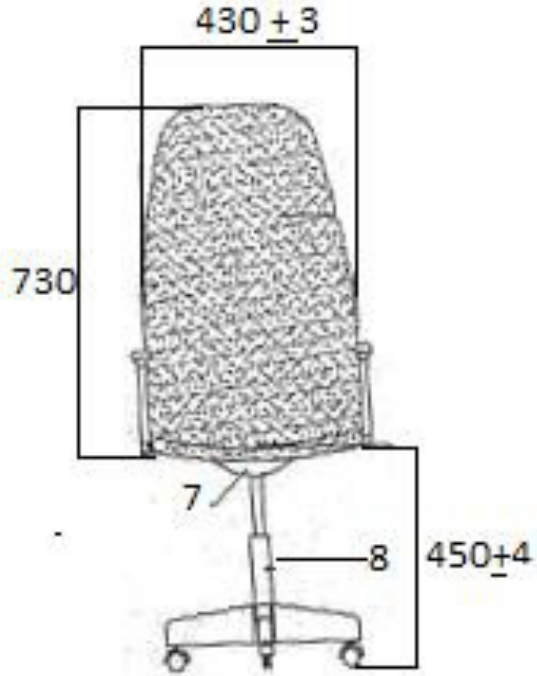

ISSUE	DATE	CHANGE	SPECIFIED TOLERENCES			
			"FIGURE" = +/- 1.2 "FIGURE" = +/- 1.5 "FIGURE" = +/- 1.1 UNSPECIFIED TOLERENCES =+/- 2.1	**PRINCIPALS** X NO MEASUREMENTS TO BE SCALED FROM THE DRAWING	***HIGH BACK SWIVEL & TILT CHAIR WITH 5-STAR BASE***	

basic education
Department:
Basic Education
REBUBLIC OF SOUTH AFRICA

ADMINISTRATOR CHAIR TYPIST

Note:

1. SEAT AND BACK APPROVED FOAM [SEAT (45MM THICK) MINIMUM 23KG/M3, BACK (25MM THICK) MINIMUM 16KG/M3] AND UPHOLSTERY (100% POLYPROPYLENE – CONTRACT QUALITY) FOAM TO BE GLUED ONTO ± 11MM SHAPED PLYWOOD SEAT AND BACK
2. SEAT FITTED WITH BOLTS & T-NUTS TO STEEL FRAME
3. BACK FITTED WITH BOLTS & T-NUTS TO STEEL FRMAE
4. GAS HEIGHT ADJUSTABLE SPINDLE
5. FIVE (5) STAR REINFORCE NYLON BASE WITH DURABLE CASTORS CHAIR TO COMPLY WITH SANS/SABS 1244;1979

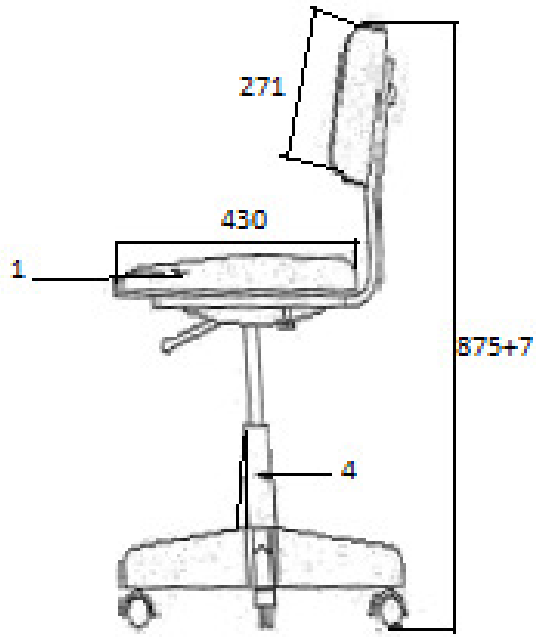

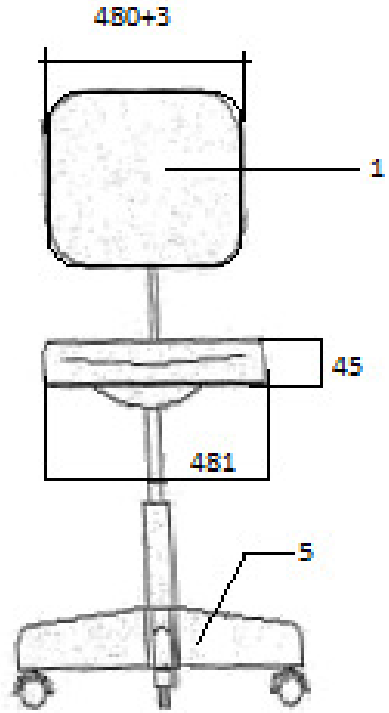

ISSUE	DATE	CHANGE	SPECIFIED TOLERENCES			
			"FIGURE" = +/- 1.2 "FIGURE" = +/- 1.5 "FIGURE" = +/- 1.1 UNSPECIFIED TOLERENCES =+/- 2.1	**ADMIN** X NO MEASUREMENTS TO BE SCALED FROM THE DRAWING	***LOWER BACK TYPIST CHAIR WITH 5-STAR BASE***	

basic education
Department:
Basic Education
REBUBLIC OF SOUTH AFRICA

FILLING RACK PIGEON HOLE 30 DIVISION

Note:

1. LP. LAMINATE: DOUBLE DECOR WITH 16mm SUBSTRATE (REF 2.1.9)
2. 6.4mm SHELVES AND 3.2mm BACK PANEL RECESSED INTO TOP AND SIDES (IN HARDBOARD)
3. ALL EPOSED EDGES TO BE EDGED WITH MATCHING LAMINATE (REF 2.1.3

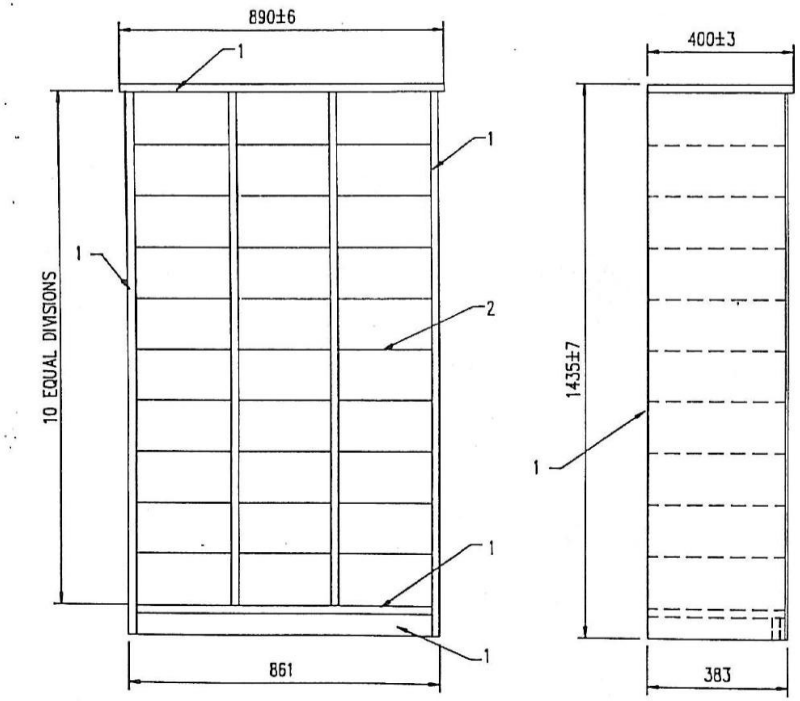

ISSUE	DATE	CHANGE	SPECIFIED TOLERENCES			
				FILLING RACK X NO MEASUREMENTS TO BE SCALED FROM THE DRAWING	***FILLING RACK PIGEON HOLE 30 DIVISION***	

basic education
Department:
Basic Education
REBUBLIC OF SOUTH AFRICA

PRINCIPAL CORRESPONDENCE RACK

Note:

1. CARCASS (BOTTOM,SIDES, BACK AND DIVISION) MANUFACTURED FROM DOUBLE SIDED MELAMINE FACED (NATURAL OAK) 12MM PARTICE BOARD
2. ALL EDGES SEALED WITH PVC EDGING
3. CORRESPONDENCE RACK MUST COMPLY WITH SABS 1528-3:1992

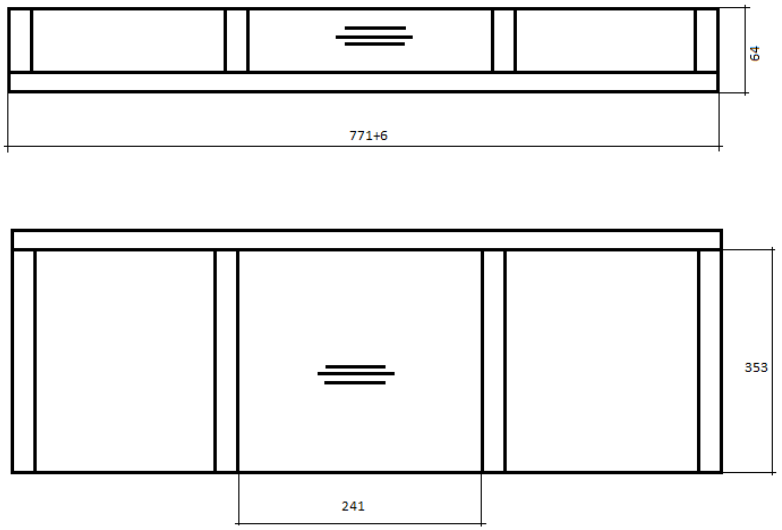

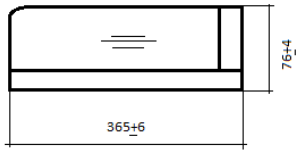

ISSUE	DATE	CHANGE	SPECIFIED TOLERENCES			
				PRINCIPAL CORR RACK X NO MEASUREMENTS TO BE SCALED FROM THE DRAWING	***CORRESPONDENCE RACK 3 DIVISION***	

basic education
Department:
Basic Education
REBUBLIC OF SOUTH AFRICA

PRINCIPAL GLASS BOOCKASE

Note:

1. CARCASS (TOP,BOTTOM, SIDES AND ADJUSTABLE SHELVES) MANUFACTURED FROM 16MM SUBSTRATE VENEER BOARD (COLOUR TO MATCH ITEM IN FIG 13) ALL EDGES SEALED WITH MATCHING VENEER
2. DOOR FRAME ASSEBLES,FIXED SHELF AND BASE MANUFACTURED FROM 21MM SOLID SALIGNA HARDWOOD (Eucalyptus Crendls)
3. BACK 3.2MM HARDBOARD
4. ALL TIMBER COMPONENTS TO BE VARNISHED WITH TWO COATS OF CATALYSED LACCUER
5. FIT 3MM CLEAR FLOAT GLASS TO DOOR FRAMES
6. BOOKCASE MUST COMPLY WITH SABS:1528-3:1992

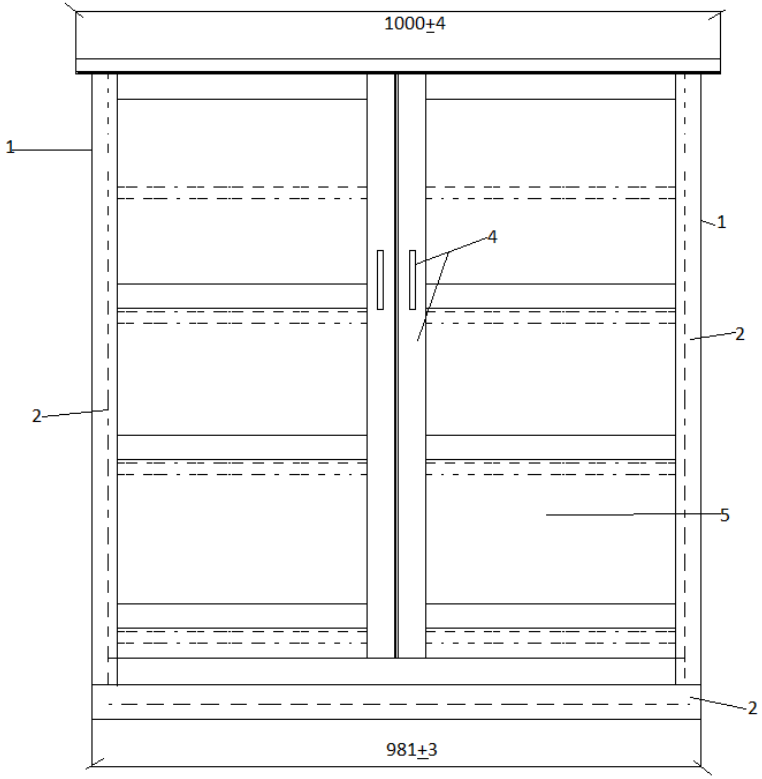

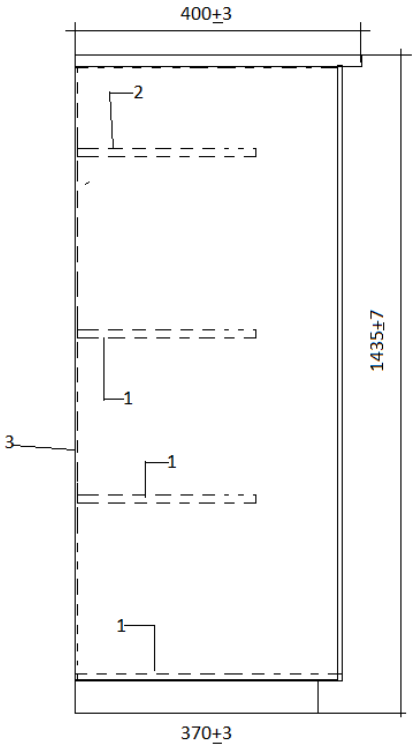

ISSUE	DATE	CHANGE	SPECIFIED TOLERENCES			
				PRINCIPAL BOOKCASE X NO MEASUREMENTS TO BE SCALED FROM THE DRAWING	***WOODEN GLAZED DOOR BOOKCASE WITH 3 SHELVES***	

basic education
Department:
Basic Education
REBUBLIC OF SOUTH AFRICA

LIBRARY BOOKSHELF

Note:

1. CARCASS (TOP,BOTTOM, SIDES AND ADJUSTABLE SHELVES) MANUFACTURED FROM 16MM SUBSTRATE VENEER BOARD (COLOUR TO MATCH ITEM IN FIG 13) ALL EDGES SEALED WITH MATCHING VENEER
2. DOOR FRAME ASSEBLES,FIXED SHELF AND BASE MANUFACTURED FROM 21MM SOLID SALIGNA HARDWOOD (Eucalyptus Crendls)
3. BACK 3.2MM HARDBOARD
4. ALL TIMBER COMPONENTS TO BE VARNISHED WITH TWO COATS OF CATALYSED LACCUER
5. BOOKSHELF MUST COMPLY WITH SABS:1528-3:1992

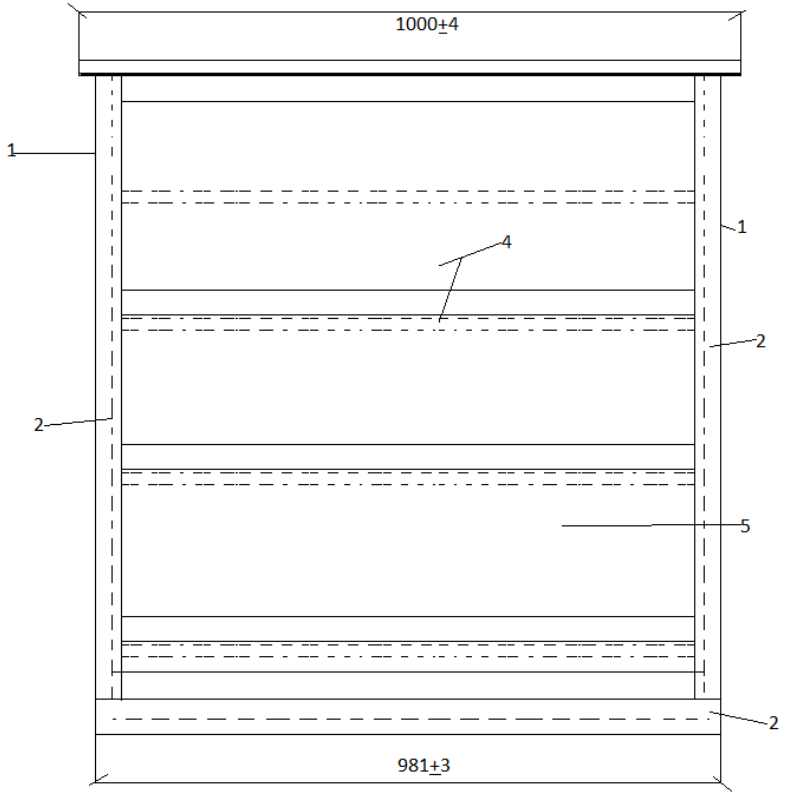

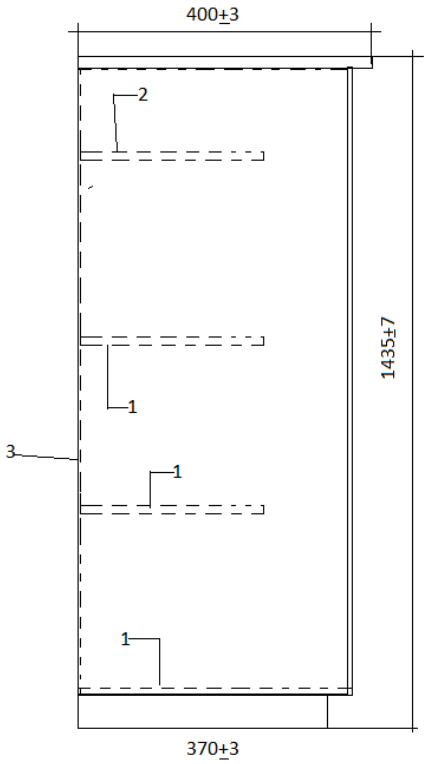

ISSUE	DATE	CHANGE	SPECIFIED TOLERENCES			
				LIBRARY BOOKSHELF X NO MEASUREMENTS TO BE SCALED FROM THE DRAWING	***WOODEN BOOKSHELF WITH 3 ADJUSTABLE SHELVES***	

basic education
Department:
Basic Education
REBUBLIC OF SOUTH AFRICA

CORNER PIECE

Note:

1. TOP POSTEDREWED (180°) DECORATIVE MELAMINE (COLOUR – NATURAL OAK) AND BALANCING BACKER LAMINATED ONTO A 32MM PARTICLE BOARD
2. EDGES TO BE SEALED WITH MATCHING PVC EDGING (AT LEAST 2MM THICK)
3. APPROVED FIXING METHOD TO DESK AND SIDE TABLES
4. CONNECTING CORNER MUST COMPLY WITH SABS 1528-2:1998 (Edition 1.1)

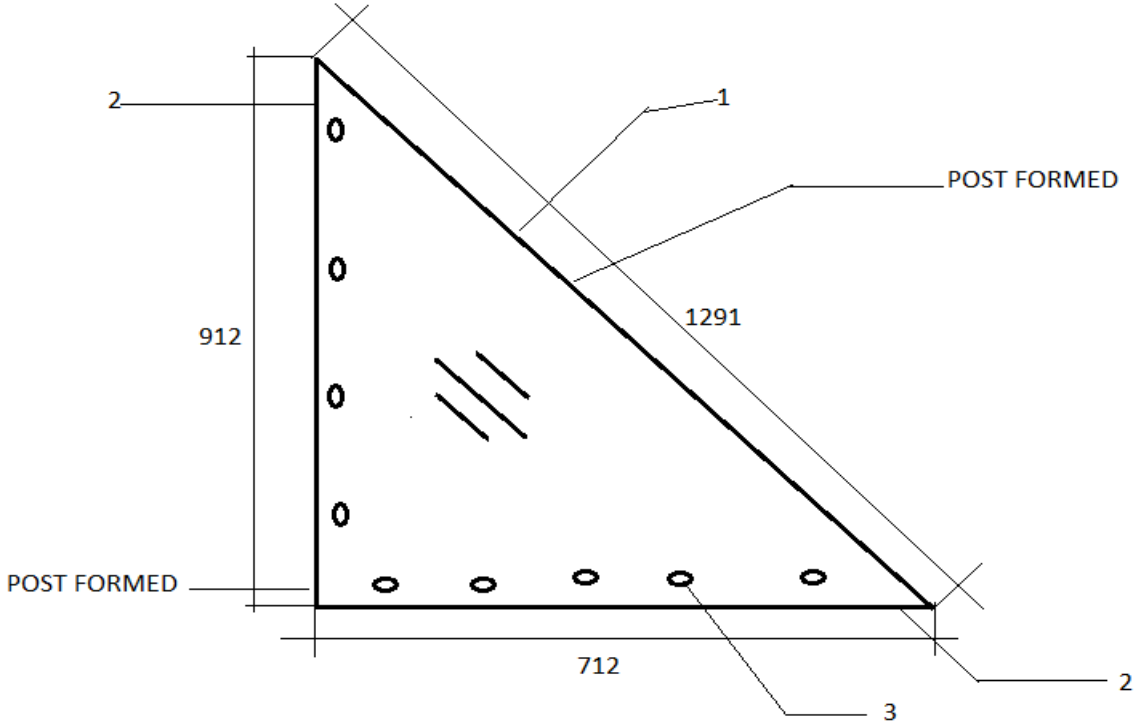

SHOWING BOTTOM VIEW

ISSUE	DATE	CHANGE	SPECIFIED TOLERENCES			
				PRINCIPAL CONER PIECE X NO MEASUREMENTS TO BE SCALED FROM THE DRAWING	***PRINCIPAL DESK CONNECTING CONER PIECE***	

basic education
Department:
Basic Education
REBUBLIC OF SOUTH AFRICA

PRINCIPAL DESK

Note:

1. TOP POSTFORMED (180°) DECORATIVE MELAMINE (NATURAL OAK) WITH BALANCING BACKER LAMINATED ON 32MM SUBSTRATE PARTICLE BOARD.
2. SIDE PANELS SAVE AS FOR TOP, BUT DOUBLE DECOR
3. DRAWER BOX WITH 3-DRAWERS TOP DRAWER LOCKABLE WITH PENCILTRAY APPROVED LOCK, METAL DRAWER RUNNERS AND MATCHING HANDLES
4. APPROVED HEIGHT ADJUSTABLE FEET
5. MODESTY PANEL, DOUBLE SIDED MELAMINE FACED (NATURAL OAK) 16MM PARTICLE BOARD
6. ALL EDGES SEALED WITH MATCHING PVC EDGING TOP EDGES EDGING AT LEAST 2MM THICK
7. DESK MUST COMPLY WITH SABS 1528-2.1996 (Edition 1.1)

Add Clerk's drawers

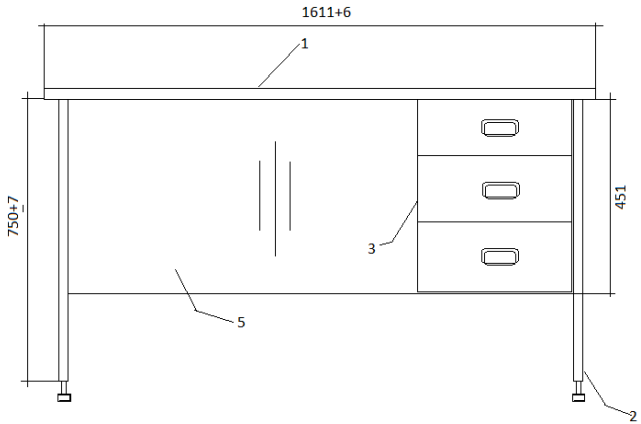

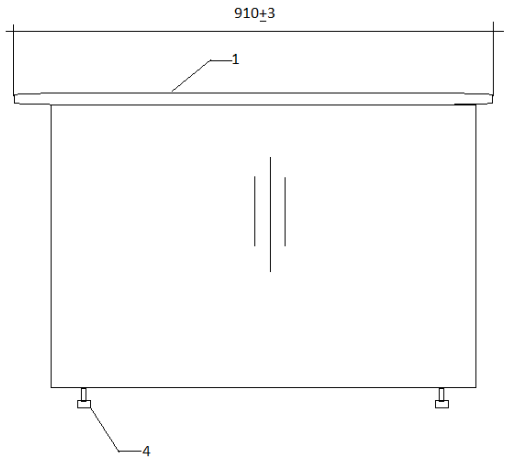

ISSUE	DATE	CHANGE	SPECIFIED TOLERENCES			
				PRINCIPAL DESK X NO MEASUREMENTS TO BE SCALED FROM THE DRAWING	***PRINCIPAL DESK WITH 3 DRAWERS FITTED ON RIGHT HAND SIDE***	

basic education
Department:
Basic Education
REBUBLIC OF SOUTH AFRICA

FILLING CABINET PRINCIPAL

Note:

1. TOP MELAMINE FACED (OAK) LAMINATE AND BALANCING BACKER LAMINATED TO A 32MM SUBSTRATE BOARD
2. CARCASS (SIDES, BOTTOM,RAILS AND DRAWER FRONTS) (NATURAL OAK) 16MM PARTICLE BOARD EDGES SEALED WITH MATCHING PVC EDGING TOP EDGES AT LEAST 2MM THICK PVC EDGING.
3. BACK MANUFACTURED FROM DOUBLE SIDED MELAMINE FACED (NATURAL OAK) 12MM PARTICLE BOARD
4. APPROVED LOCKS
5. DRAWER CARCASS MANUFACTURED FROM DOUBLE SIDED MELAMINE FACED 16MM PARTICLE BOARD, EDGES SEALED WITH MATCHING PVC EDGING, A4 POCKET FOLDERS MUST FIT IN DRAWER IN A HANGING POSITION
6. APPROVED HANDLE AND METAL DRAWER RUNNERS
7. CABINET MUST COMPLY WITH SABS 1528-3:1992

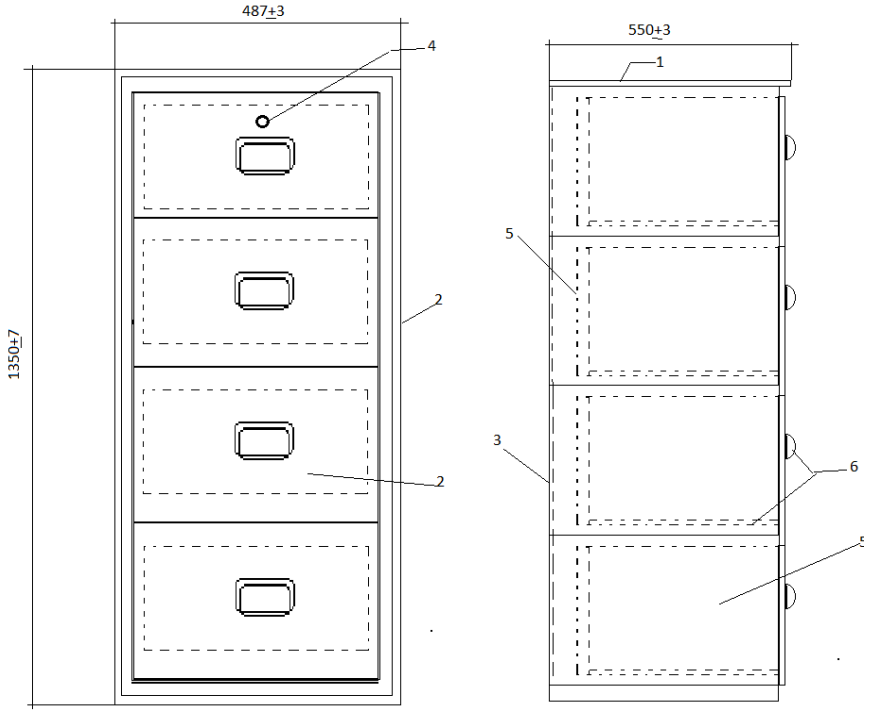

ISSUE	DATE	CHANGE	SPECIFIED TOLERENCES			
				PRINCIPAL FILING CABINET X NO MEASUREMENTS TO BE SCALED FROM THE DRAWING	***FILLING CABINET 4 DRAWERS***	

basic education
Department:
Basic Education
REBUBLIC OF SOUTH AFRICA

CREDENZA SLIDING DOORS – PRINCIPAL CREDENZA

.

Note:

1. TOP POSTFORMED (180°) DECORATIVE MELAMINE OAK WITH BALANCED BACKER LAMINATED ON 32MM SUBSTRATE PARTICLE BOARD
2. CARCASS (SIDES, BOTTOM AND ADJUSTABLE SHELF) MANUFACTURED FROM 16MM DOUBLE SIDED MELAMINE FACED (NATURAL OAK) PARTICLE BOARD
3. DOORS AND BACK (GROOVED AND GLUED IN) MANUFACTURED FROM 12MM DOUBLE SIDED MELAMINE FACED (NATURAL OAK) PARTICLE BOARD
4. ALL EDGES TO BE SEALED WITH MATCHING PVC EDGING
5. APPROVED HEIGHT ADJUSTABLE FEET
6. APPROVED HANDLES AND LOCK (PUSH BUTTON)
7. PVC SLIDING HANDLES TOP AND BOTTOM
8. CREDENZA MUST COMPLY WITH SABS 1528-3:1992.

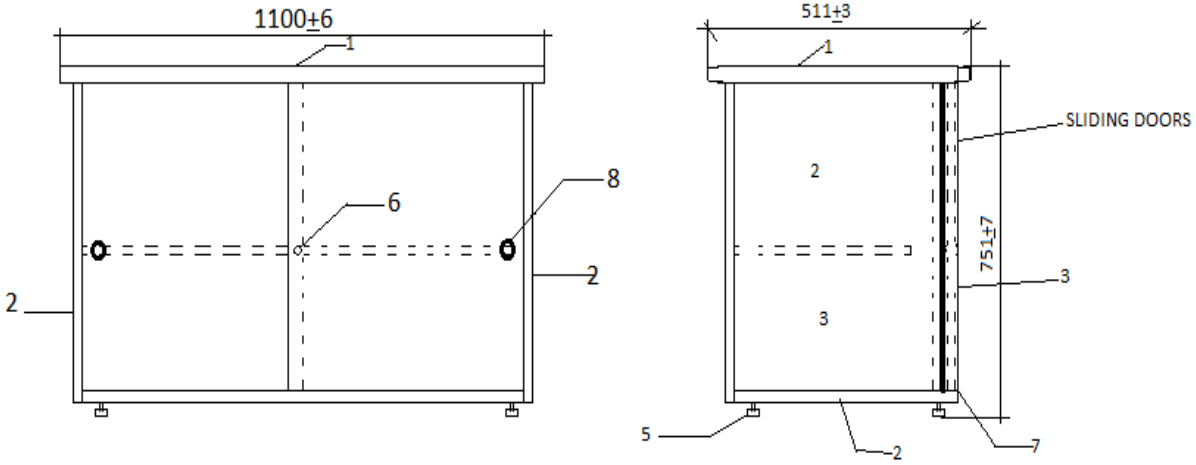

ISSUE	DATE	CHANGE	SPECIFIED TOLERENCES			
				PRINCIPAL CREDENZA X NO MEASUREMENTS TO BE SCALED FROM THE DRAWING	***CREDENZA WITH SLIDING DOORS***	

basic education
Department:
Basic Education
REBUBLIC OF SOUTH AFRICA

UPHOLSTERED CHAIR – HEAD OF DEPT

Note:

1. SEAT AND BACK APPROVED FOAM (SEAT MINIMUM 23KG/M3; BACK MINIMUM 16KG/M3) AND UPHOLSTERY (100% POLYPROPYLENE – CONTRACT QUALITY) FOAM TO BE GLUED ONTO 16MM PARTICLE BOARD
2. STACKABLE STEEL FRAME ASSEMBLY 22.23X1.2MM SQUARE TUBING WITH BAKED BLACK EPOXY/POLYESTER POWDER COATING FINISH
3. DURABLE PLUGS FITTED TO ALL OPEN STEEL ENDS
4. SEAT FITTED TO STEEL FRAME WITH APPROVED SCREWS
5. BACK FITTED WITH BOLTS & T-NUTS TO STEEL FRAME
6. APPROVED ARM RESTS FITTED TO STEEL FRAME
7. CHAIRTO COMPLY WITH SANS/SABS 1244:1979

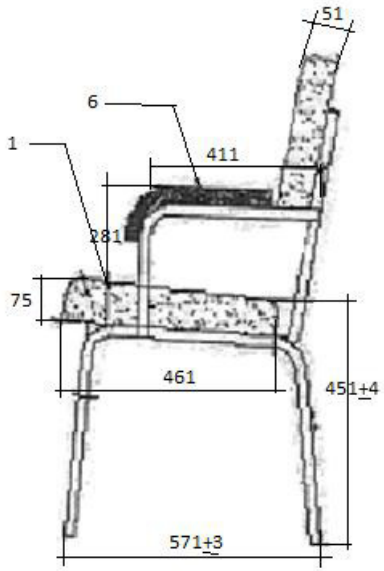

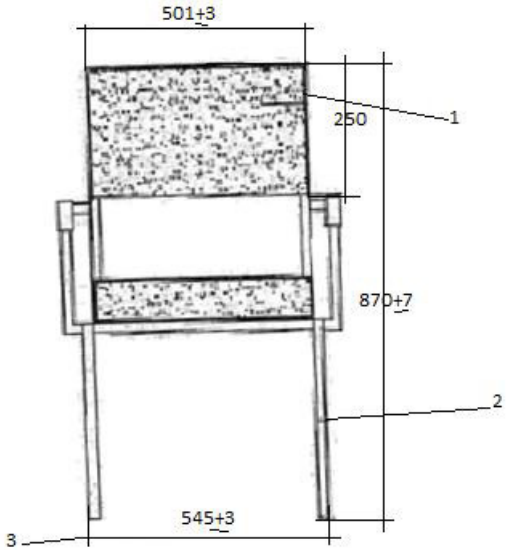

ISSUE	DATE	CHANGE	SPECIFIED TOLERENCES			
				HEAD OF DEPT X NO MEASUREMENTS TO BE SCALED FROM THE DRAWING	***UPHOLSTERED SIDE CHAIR WITH ARMS***	

basic education
Department:
Basic Education
REBUBLIC OF SOUTH AFRICA

UPHOLSTERED SICK ROOM CHAIR

Note:

1. SEAT AND BACK APPROVED FOAM (SEAT MINIMUM 23KG/M3; BACK MINIMUM 16KG/M3) AND UPHOLSTERY (100% POLYPROPYLENE – CONTRACT QUALITY) FOAM TO BE GLUED ONTO 16MM PARTICLE BOARD
2. STACKABLE STEEL FRAME ASSEMBLY 22.23X1.2MM SQUARE TUBING WITH BAKED BLACK EPOXY/POLYESTER POWDER COATING FINISH
3. DURABLE PLUGS FITTED TO ALL OPEN STEEL ENDS
4. SEAT FITTED TO STEEL FRAME WITH APPROVED SCREWS
5. BACK FITTED WITH BOLTS & T-NUTS TO STEEL FRAME
6. APPROVED ARM RESTS FITTED TO STEEL FRAME
7. CHAIRTO COMPLY WITH SANS/SABS 1244:1979

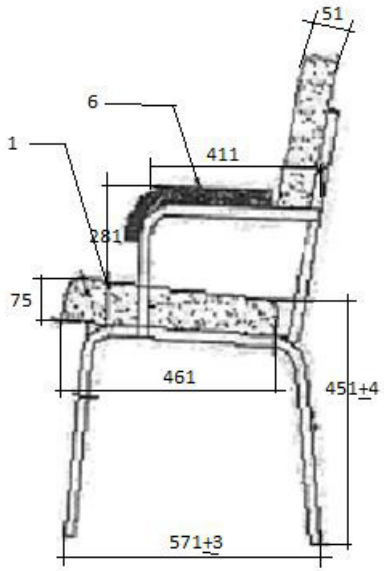

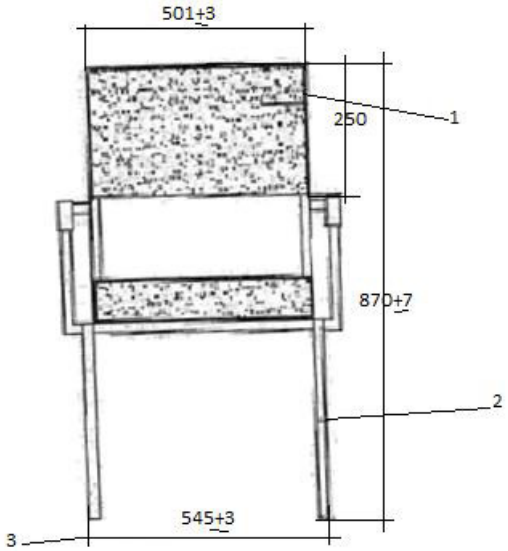

ISSUE	DATE	CHANGE	SPECIFIED TOLERENCES			
				SICK ROOM X NO MEASUREMENTS TO BE SCALED FROM THE DRAWING	***UPHOLSTERED SIDE CHAIR WITH ARMS***	

basic education
Department:
Basic Education
REBUBLIC OF SOUTH AFRICA