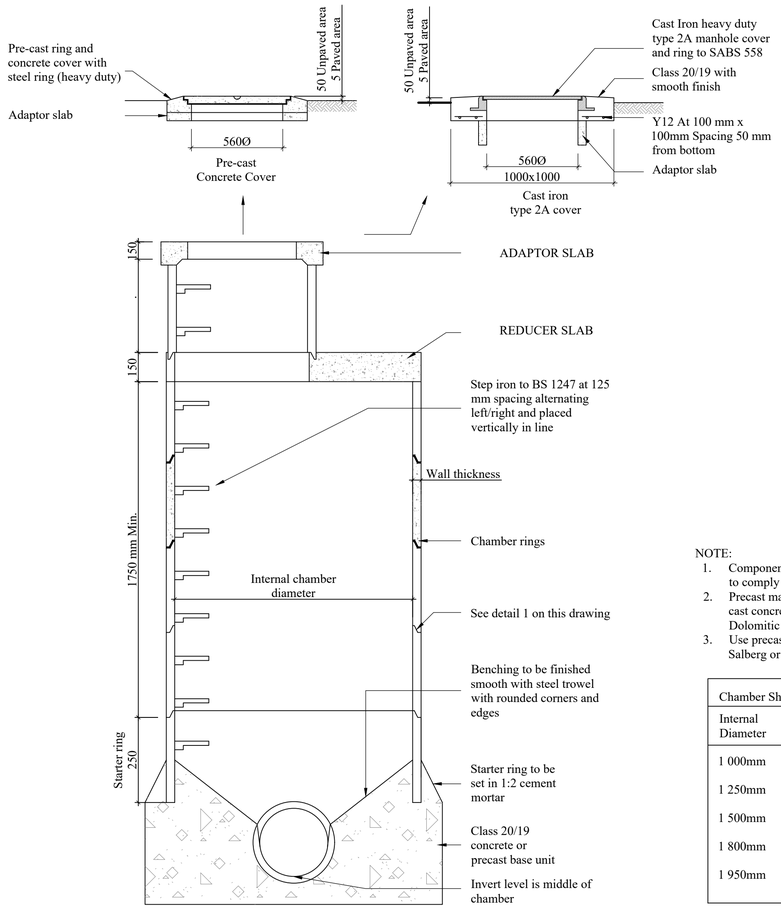

PRE-CAST RING MANHOLE

NOT TO SCALE

NOTE:

1. Components of precast manhole to comply with SABS 1294
2. Precast manhole concrete and in-situ cast concrete to be made with Dolomitic aggregate
3. Use precast concrete units from Salberg or similar approved

Chamber Shaft	
Internal Diameter	Minimum Wall thickness
1 000mm	65mm
1 250mm	75mm
1 500mm	83mm
1 800mm	95mm
1 950mm	102mm

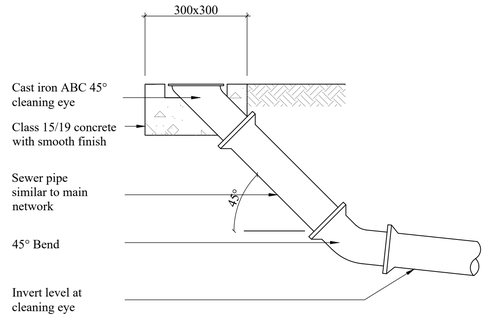

Typical Cleaning Eye Detail

N.T.S

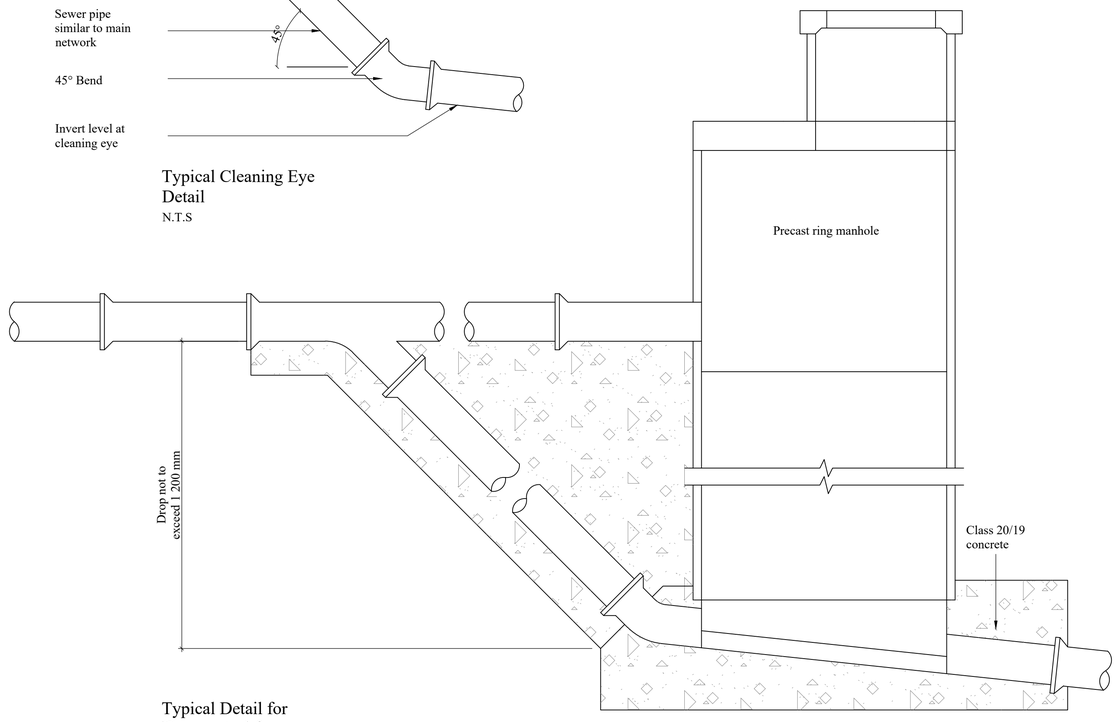

Typical Detail for Drop up to 1.2m

N.T.S

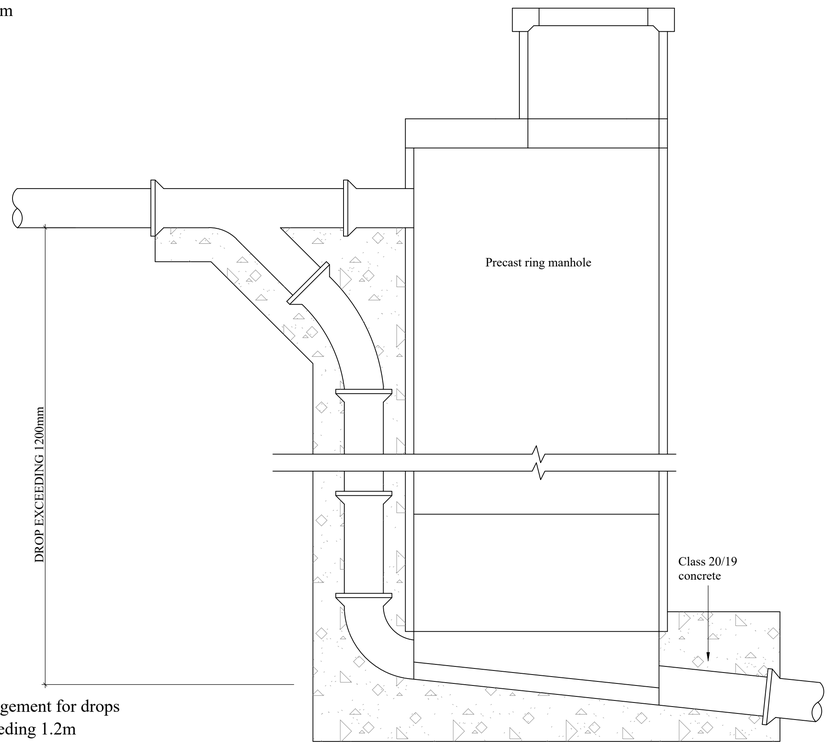

Manhole arrangement for drops for drops exceeding 1.2m

N.T.S

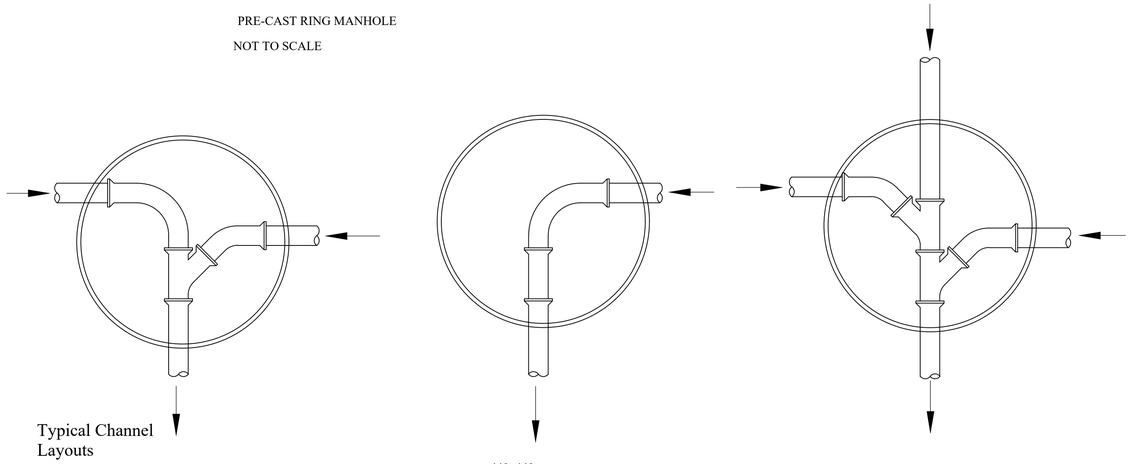

Typical Channel Layouts

N.T.S

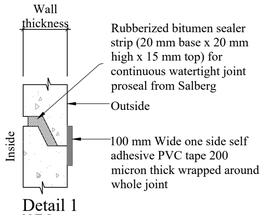

Detail 1

N.T.S

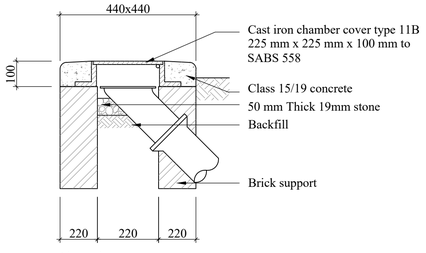

Alternative

N.T.S

GENERAL NOTES

- FIGURED DIMENSIONS ONLY TO BE USED.
- COORDINATES BASED ON WGS84
- LEVELS BASED ON MSL DATUM
- DISCREPANCIES, ERRORS AND OMISSIONS ARE TO BE REPORTED TO ENGINEER IMMEDIATELY THEY BECOME EVIDENT.
- SHOP DRAWINGS TO BE SUBMITTED FOR APPROVAL PRIOR TO MANUFACTURE OR INSTALLATION.
- COPYRIGHT AND RIGHT OF REPRODUCTION OF THIS DRAWINGS OR ANY PORTION THEREOF IS RESERVED.

GENERAL CIVIL NOTES

1. THE ORDER OF PRESEDENCE OF THE DOCUMENTATION FOR THE WORKS IS:
   - DRAWINGS
   - REVISIONS OR ADDITIONS TO THE STANDARD SPECIFICATIONS
   - STANDARD SPECIFICATIONS
   - SCHEDULE OF QUANTITIES
2. STATUS OF EXISTING SERVICES:
   - UNDERGROUND KNOWN SERVICE IF IT IS SHOWN ON A DRAWING
   - UNDERGROUND UNKNOWN SERVICE IF NOT REFLECTED ON DRAWINGS, BUT LOCATED ON SITE
   - ALL SERVICES ABOVE GROUND ARE DEEMED TO BE KNOWN SERVICES, IRRISPECTIVE WEATHER IT IS REFLECTED ON A DRAWING OR NOT
3. EXISTENCE AND EXACT POSITION OF KNOWN SERVICES ARE TO BE CHECKED BY THE CONTRACTOR PRIOR TO ANY WORK BEING DONE IN THAT AREA
4. CONTRACTOR TO INFORM THE ENGINEER OF ANY UNKNOWN SERVICE AS SOON AS IT IS LOCATED
5. CONTRACTOR TO VERIFY ALL DETAILS PERTAINING TO THE CONNECTION TO ANY EXISTING SERVICE PRIOR TO THE WORK BEING DONE. ANY DISCREPANCIES WITH THE DRAWINGS SHALL BE REPORTED TO THE ENGINEER
6. CONTRACTOR TO OBTAIN THE REQUIRED APPROVAL FROM THE AUTHORITY PROVIDING THE SERVICE FOR CONNECTING INTO SUCH A SERVICE

Rev	Description	Date	By
A	Issued for Tender	12/02/24	RK

Client:

DBSA
DEVELOPMENT BANK OF SOUTHERN AFRICA
Building Africa's Prosperity

Phunga Consulting Engineers
Quality Driven Solutions

Route 21 Corporate Park, Block D, 63 Regeney Drive Irene,
Centurion, 0157 South Africa,
Tel: (+27)12 345 6694, Fax: (+27)12 345 6813,
E-mail: info@phunga.co.za,
Web: www.phunga.co.za

Project Title:

Enoch Mamba School - Phase 1 (Decanting) - Provision of Infrastructure of Schools in Eastern Cape Province

Discipline	Signature	Pr Number	Date
Architecture			
Civil/Structural			

Drawing Number: J15-029-CE-DET-001		**Drawn:** R. Koee
Drawing Title: Sewer Details - Sheet 1 of 2		**Checked:** G. Mabika
Dwg Size: A1	**Dwg Rev:** A	**Approved:** C. Giyose
Scale As Shown	**Stage** Tender	**Date** Feb 2024